Fumigation monitoring instruments for phosphine, sulfuryl fluoride, methyl bromide and carbon dioxide

Shashank, N.*, Naik, R.C.#, Shroff, R.D.
Uniphos Envirotronic Pvt. Ltd., P.O. Nahuli, Tal. Umbergoan, Dist. Valsad, Gujarat-396108, India

*Corresponding author, Email: Nagarajs@uniphos.com
#Presenting author, Email: naikrc@uniphos.com

DOI: 10.14455/DOA.res.2014.72

Abstract

Fumigation is the most effective way of killing pests that infest all types of food commodities, warehouses, processing factories and transport vehicles. It involves creating an environment containing effective concentration of fumigant gas (which are toxic to target infestation) for sufficient period of time to kill infestations in any forms. There are several fumigants, but the most commonly used fumigant gases are Phosphine (PH_3), Methyl Bromide (MBr), Carbon dioxide (CO_2) and more recently Sulfuryl Fluoride (SO_2F_2), which is gaining popularity due to several reasons. Precise monitoring of these fumigants during fumigation becomes necessary to confirm proper fumigation and also to conform to regulatory requirements. Since the fumigants are toxic in nature, an automatic monitoring system with minimal or no manual intervention is always preferred. This paper describes various instruments that are developed by Uniphos Envirotronic Pvt. Ltd. (UEPL) for the detection of the above said fumigants during fumigation. Depending upon the target gas, instruments are developed based on electrochemical sensors (for Phosphine), NDIR - Non Dispersive Infrared sensors (for SO_2F_2 and CO_2) and TCD - Thermal Conductivity Detectors (for SO_2F_2 and MBr). To cater to different monitoring needs, several variants are developed from hand held personal monitors to fully automatic multi port monitoring systems. The fumigation process also involves checking leaks if any, during fumigation and aerating the fumigated area post fumigation to remove any residual gases to ensure that the fumigated area is safe to re-enter. This requires suitable low range instruments which can detect fumigant concentration below TLV (Threshold Limit Value). Instruments are also developed for the above application which ensures operators' safety.

Keywords: fumigation, electrochemical sensors, thermal conductivity detectors, NDIR, sulfuryl fluoride

1. Introduction

Fumigation of food and other commodities are carried out for the purpose of infestation control during storage. There are several popular fumigants like PH_3, SO_2F_2, MBr, CO_2 etc. which are used depending upon the commodities and the available time for fumigation. As a process control measure and also to conform to regulatory requirements it is necessary to monitor the fumigation process by measuring the concentration during the entire period of fumigation. For this purpose, suitable monitoring instruments and devices are required.

The present paper describes the various instruments and devices developed by Uniphos Envirotronic Pvt. Ltd. for fumigation monitoring for different fumigants like PH_3, MBr, SO_2F_2, etc. A brief description of different techniques of measurement is also presented.

2. Measurement Techniques and Instruments

2.1. Chemical detectors

One of the important measurement techniques of fumigant concentration involves the use of chemical detectors. Chemical detectors work on the principle that when the target gas comes in contact with a suitable chemical in the detector, a coloured end product results, which provides semi-quantitative and quantitative measurements.

UEPL has developed length of stain short term detector tubes for the measurement in different concentration ranges for PH_3, MBr, and CO_2. Other chemical detectors are: 1) Dosimeter tubes for PH_3 which is a unique tube which can measure the total PH_3 dose received by the food commodity with a single measurement and 2) Chemical detector strips for a semi-quantitative measurement of PH_3 in the concentration range of 1-10 ppm having application for area monitoring.

2.2. Electronic instruments

2.2.1. Portable and personal monitors for phosphine

Using an electrochemical sensor as the sensing element for PH_3, UEPL has developed a number of instruments including portable monitors, personal monitors and also a fully automatic PH_3 monitoring system. Portable monitors come with an inbuilt sample draw pump by which gas samples from a fumigation chamber, bin, or silo is drawn into the monitor for measurement. This microprocessor based system has the capability to store the data along with date and time and silo number. Data can be downloaded on a personal computer. Using the GUI software. The data from the different silos can be sorted and the Concentration-Time profile can be generated for each silo.

A miniaturized light weight phosphine personal monitor is also developed with data logging facility for the measurement of Time Weighted Average (TWA) of phosphine concentration. The monitor can be worn by an operator working around the fumigation area to monitor the gas concentration and displays on the front panel, the instantaneous concentration as well as the TWA concentration for the elapsed time. It also gives visual and audible alarms for different undesirable conditions when the operator has to leave the working area.

2.2.2. Fumitrack

One of the longstanding requirements of a fumigator was a phosphine detection system which can continuously monitor PH_3 concentration over the entire period of fumigation lasting as long as two hundred hours without any operator intervention. However, using electrochemical sensor such a system was not feasible because of the sensor mortality on continuous exposure to PH_3. Fumitrack developed by UEPL overcomes this problem of sensor mortality by making periodic measurements of PH_3 concentration (which is just what is required) and putting the sensor in idle mode after purging it with fresh air till the next measurement is made. It is a microprocessor based fully automatic online monitoring system for PH_3 which eliminates the need of an operator to make periodic measurements during fumigation lasting over several days.

The online monitoring system consists of i) A sampling line having a set of solenoid valves and manifold ii) a microprocessor based control unit housing the sample draw pump and sensor and iii) a GSM (Global System for Mobile communications) modem for data transmission. The block diagram of the whole system is given below;

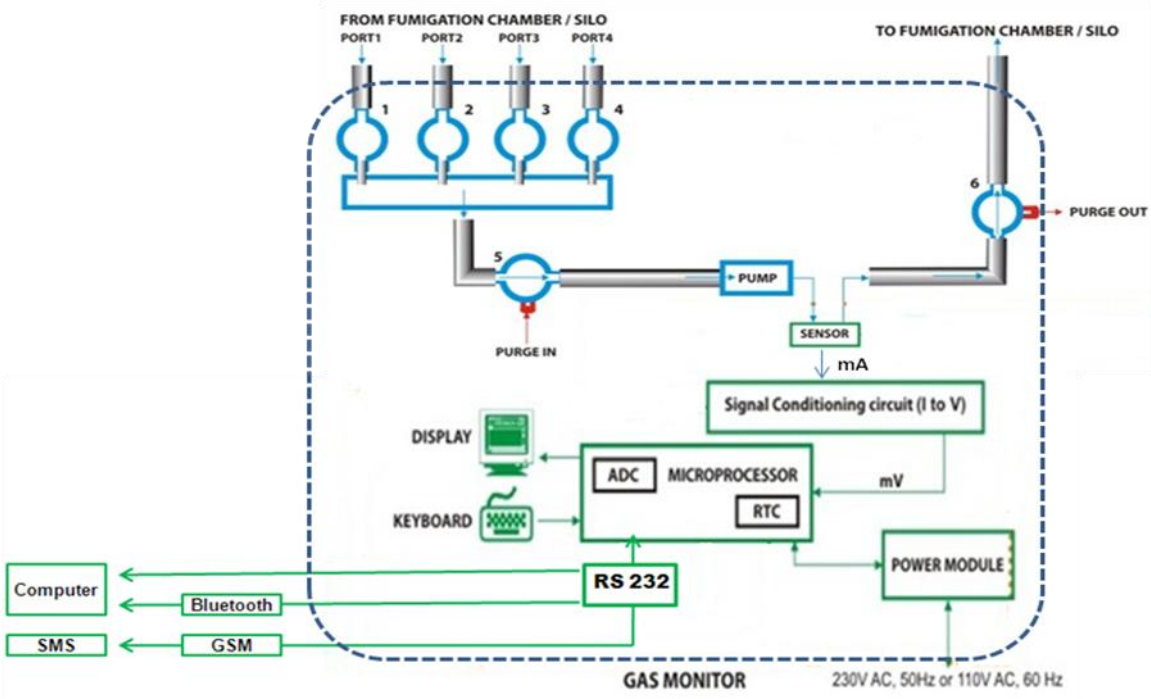

Figure 1 Schematic of Fumigation Chamber.

The instrument is programmed in the beginning by setting all the relevant parameters such as sampling time, purge time, sleep time between two cycles and the total number of cycles of measurement.

Once it is programmed and the fumigation started, the instrument sequentially draws sample gas to the sensor from four different locations of a silo and the measured concentration data is stored on the control unit. After one cycle of operation, the sensor is purged with fresh air and the instrument goes into the sleep mode till the next cycle starts after the preset period. The measurement cycle repeats till the end of fumigation.

The instrument has a data-logging facility which stores data with ID-tag. The stored data can be transferred to a computer via Bluetooth or it can be transferred to a GSM modem through RS-232 communication. GSM modem can send the data to a pre-configured mobile as an SMS. It can also send this data to pre-configured email IDs or can upload on a chosen FTP (File Transfer Protocol) server. This data can be accessed by a user through web-application.

2.2.3. Fumisense and fumispec

For the detection of MBr, SO_2F_2, CO_2 electrochemical sensors are not available. However, these gases can be detected by instruments based on Interferometry, thermal conductivity measurements or NDIR spectroscopy. The interferometric technique makes use of the differing refractive index of normal air and air containing MBr, SO_2F_2 etc. The change in the interferometric pattern resulting between normal air and air containing the fumigant gas is related to gas concentration. This is a very expensive technique and highly sensitive to dust, moisture, temperature etc. It also lacks specificity as it is affected by the presence of other impurities.

Thermal conductivity detector makes use of the property of differing thermal conductivity of MBr/SO_2F_2/CO_2 compared to normal air. The TCD sensor consists of a sensor cell and a reference cell used in the bridge circuit. The thermal conductivity difference between normal air and sample air containing fumigant gas results in an out of balance voltage which is proportional to the fumigant gas concentration.

As compared to interferometric method this is less sensitive to environmental factors and less expensive. This method also lacks specificity and works well when only one extraneous gas is present in the matrix air. The other technique is based on NDIR spectroscopy.

Most of the polyatomic molecules including diatomic molecules have strong adsorption bands in the infrared. They can be used as fingerprints of the molecules for their detection and determination. There are many dispersive and non dispersive infrared analyzers, which make use of this absorption property of the gas molecules. For industrial application in the field mostly non-dispersive IR analyzers are used. A typical NDIR setup is shown below.

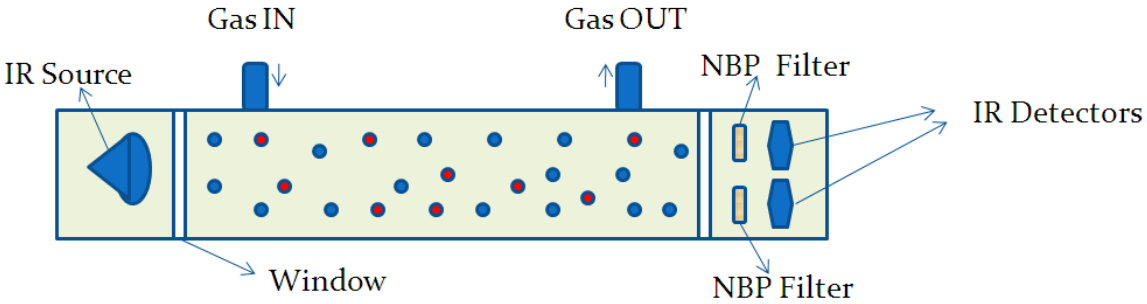

Figure 2 Schematic of NDIR sensor.

Fumisense - It is an instrument based on thermal conductivity measurement developed for measurement of MBr/SO_2F_2/CO_2 during fumigation. It is a fully microprocessor based system with menu driven operation. The inbuilt pump helps in bringing the sample from fumigation chamber/silo to the monitor for making measurement. The measured data is stored with time, date and silo no. etc. on the instrument and it can be downloaded on the computer which can generate a report sorting out the data belonging to different silos.

Another model of Fumisense comes with both TCD for the measurement of MBr/SO_2F_2/CO_2 gas concentration and an electrochemical sensor for the measurement of PH_3. It has two pumps and two sampling lines. The gas to be measured is selected from the instrument menu and the sampling line is to be accordingly selected.

Fumispec - The Uniphos FUMISPEC is an instrument developed for the detection of Sulfuryl Fluoride for fumigation applications. It is based on NDIR technique. An IR absorption band of SO_2F_2 is used as its fingerprint. It comes with two models Fumispec-Hi and Fumispec-Lo.

Fumispec-Hi is a fully automatic system specially designed for monitoring the gas concentrations in a fumigation enclosure or silo and can measure SO_2F_2 in the range 0 to 4% (0-160 g/m^3). The basic components of the instrument are the NDIR cell, a dust filter, dehumidifier, a sample draw pump, a set of solenoid valves and microprocessor based signal conditioning electronics. The instrument can be programmed to take samples from three different locations for analysis. Being a microprocessor based unit, it has data logging facility and is capable of storing up to 4,000 data with gas concentration, date, time and silo number. The stored data can also be downloaded to a personal computer or a printer.

Fumispec-Lo is a battery operated portable instrument which can measure SO_2F_2 in the range 0-100 ppm. It has a specially designed long path gas cell meant for the detection of low concentration of SO_2F_2 in the range of 0-100 ppm. The sample for measurement is drawn by the inbuilt sample draw pump. The instrument is suitable for applications related to personal protection and safety and also for leak detection when used with a sampling probe.