# RECENT DEVELOPMENTS IN ENGINEERING OF FOOD GRAIN STORAGE IN INDIA

*BD Shukla and RT Patil*

**Central Institute of Agricultural Engineering**
**Nabi Bagh, Berasia Road, Bhopal-462 018, India**

## ABSTRACT

**India produces annually about 175 million tonnes of grain which is stored in various type of structures of capacities 0.1 to 2500 tonnes. With increase in production the importance of scientific storage is being felt. During the last three decades several developments have taken place in design of structures both at the farmers as well as organisational levels. The polyethylene due to its inherent impervious property has been used effectively as a constructional material right from domestic to bulk storage levels. The warehouse designs have been so modified that there is less requirement of steel and cement, and utilise maximum floor space which has reduced the storage cost. The paper reviews the informations and presents the status of new technology being adopted in the design of grain storage structures in India.**

## INTRODUCTION

India produces about 175 million tonnes of food grains annually. About 70% farm produce is stored by the farmers for their own consumption. Farmers store their grain in bulk using different type of storage structures made of locally available materials. The remaining grain is stored by traders, big farmers, co-operatives and government agencies like Food Corporation of India. The available storage capacity of these sectors is about 12% of the total production and 41% of the surplus is collected for trading.

The major construction materials of storage structures used in rural areas are mud, bamboo, stones and plant materials. They are neither rodent proof nor secure from fungus and insect attack. On an average, out of total 6% losses in storage, about half is due to rodents and half is due to fungus and insects. Therefore, important considerations like; (a) location of structures should be at elevated place and away from moisture, (b) the structure should be air tight, even at loading and unloading ports, (c) rodent proof materials should be used for construction, (d) the area surrounding the structure should be clean to minimise insect breeding, and (e) the structure should be plastered with an impervious clay layer to avoid termite and other insects attack, are essential to practice in building grain storage structures (Shukla and Patil, 1988).

## FARM LEVEL STORAGE STRUCTURES

During the last one decade, attention has been given to develop scientific storage structures in India to meet the needs of small scale farmers. Some typical farm level storage structures developed in different parts of the country are described below.

### Chittor Stone Bin

It has been developed for the arid region of the country where stone slabs are naturally available in abundance. The bin is constructed using 40 mm rectangular stone slabs of storage capacity about 250 kg. These bins are constructed by the farmers using mud as cementing material.

### Double Walled Polyethylene Lined Bamboo Bin

Conventionally, the bamboo bin plastered with mud both from in and out sides and fitted with a lid, is a very common structure used by the farmers. These bins are not impervious and are prone to attack by insect pests. The modification to these bins by lining them with polyethylene has been found to be very effective. The bin is mounted on a metal tripod with rat barriers. At the discharge end, the use of a metal cone has made unloading very easy without spillage of grain (Fig. 1). It ensures air tightness of the opening due to constant pressure head of the grain (Chouksey, 1985).

A flask shaped structure made of bamboo strips and covered with polyethylene sheet is used in North Eastern region of India. In order to give mechanical strength and sturdiness to the structure, a frame made of cane is fitted over it. Thus the structure looks like a thermosflask. For handling and transportation of the structures, two rings are fitted on the body (Fig. 1). The capacity of the bin is about 125 kg. The observation recorded on storage indicates that there is no variation in moisture content of grain during storage. At the end of 12 months storage the viability of the seed remains about 93% with no insect damage (Bhattacharjee etal, 1986).

A low cost modified mud grain storage structure made of Ipomea cornea stalk which works as a reinforcing material is used in central India (Ahmed and Dwyer, 1986). The Ipomea being lighter, strong, easy to work and can be shaped in desired forms. It has strong resistance to weather, disease and infestation. The capacity of the structure is 1 tonne. The structure has a good insulating property hence, the grains are safe during storage.

## BULK STORAGE STRUCTURE AT FARMERS LEVEL

The big farmers need bigger structures having capacity of 1-4 tonnes. On farm storage (2-3 weeks), the farmers use crop umbrella made of flexible PVC sheet of 30-50 micron. Sometimes, tarpaulins or large canvass sheets are also used to protect the grain. However, for long duration storage a LDPE sandwitched bin has been found to be most suitable and is popularly known as **Pusa Bin.** Except the LDPE which is purchased from market, the entire bin is made of mud. The performance of the bin has been found similar to any other metal or concrete structures. In fact because of good insulation properties of mud brick, the problem of moisture migration is also neglegible. About 9.5 million tonnes of food grains are stored in such bins in India. The details about the construction of the bin are explained in the Fig. 2. This type of bins are made in capacities range of 0.5 to 4 t.

### Underground Air Tight RCC Structures

In hermatically sealed storage structures moulds do not develop even if the grain is damp. Similarly the insects also do not develop due to low oxygen concentration. In view of this an underground structure of 3.5 t capacity was developed at Indian Grain Storage Institute (IGSI), Hapur (Birewar, 1986). The structure is circular in shape having 2 m diameter and 1.5 m depth. It is constructed below the ground level except the upper part of 600 mm is kept above the ground level to make it rat proof and prevent entry

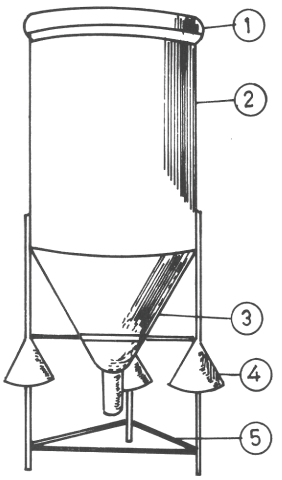


1. LID
2. STORAGE BIN
3. DISCHARGE CONE
4. RAT GUARD
5. TRIPOD STAND

PKV AKOLA BIN

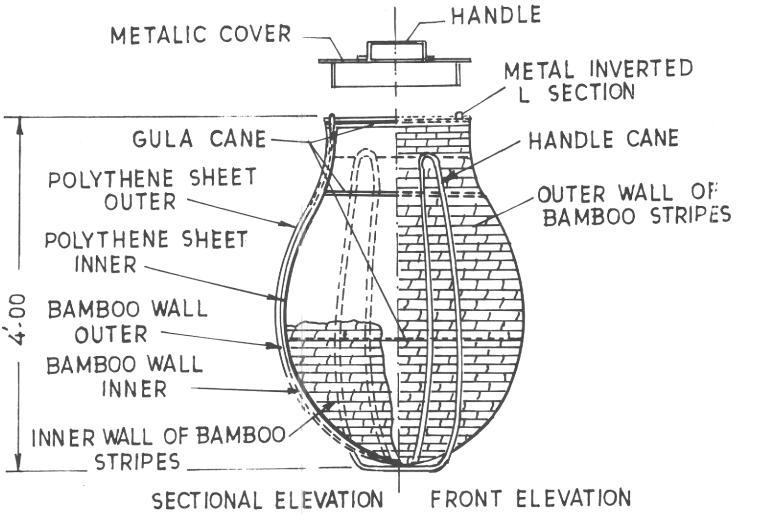


HOLLOW BAMBOO STRIP STORAGE STRUCTURE

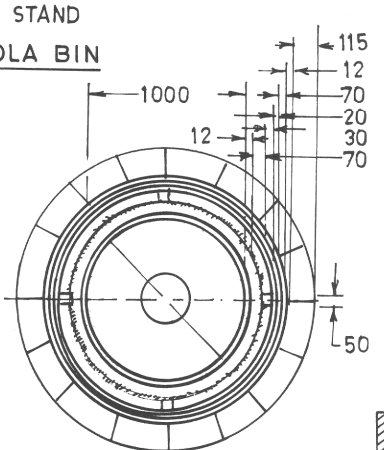


PLAN

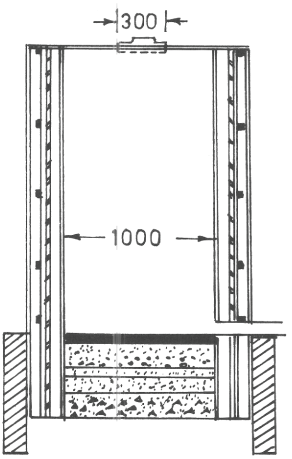


DIMN IN mm

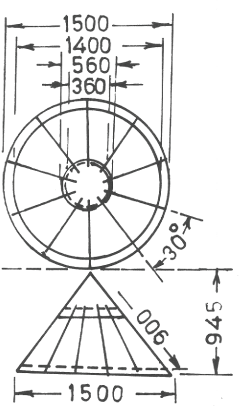


ROOF COVER
PLAN AND ELEVATION

IPOMEA REINFORCED MUD STORAGE STRUCTURE

FIG.1 LOW COST FARMERS LEVEL STORAGE STRUCTURES

of surface water. The entire structure is made of RCC except the floor. The floor construction consists of two layers of cement concrete. A thick layer of bitumen is also provided in between these layers. A coating of bitumen is provided on the exterior side of the wall for moisture proofing. The structure has been found suitably air tight and as a result, one fumigation serves the purpose for 33 months storage of wheat (Fig. 2).

## BULK STORAGE OF FOOD GRAIN

The main agencies involved in large quantity storage of food grains for a longer period are: (a) The Food Corporation of India [FCI], (b) Central Warehousing Corporation [CWC], (c) State Warehousing Corporation [SWC], (d) Grain Marketing Cooperatives [GMC], and (e) Some State Government Agencies

Several type of storage systems are followed in India depending on the length of storage and product to be stored. Some of them are mentioned below.

### Cover and Plinth Storage

This is an improvised arrangement of storing food grains in open, generally on a plinth, which is damp and rat proof. The grain bags are stacked in a standard size on wooden dunnage. The stacks are covered from all four sides and top with 250 micron LDPE sheets. Food grains in this system are generally stored for 6-12 months.

### Community Storage Structures

Bulk storage structures of higher capacity are termed community storage. They are made from reinforced bricks, corrugated galvonised iron or aluminium sheets in capacities ranging from 25 to 75 t (Birewar, 1985).

### Godowns (Bag Storage Structures)

These are primarily meant for providing warehousing facilities to the farmers. The godowns, 100 t to 5000 t capacity, are owned by Govt. agencies. The features of some of the important types of structures as shown in Fig. 3 are given below (Mathur, 1986).

### Twin Span Warehouse With Structural Trusses

This design was adopted in early sixties and constructed with brick or stone masonary. Asbestos or corrugated GI sheets supported by steel trusses are used for roofing. Due to provision of valley gutters, there is perennial problem of leakage resulting in damage of stored grain.

### Flat RCC Roof Warehouse

To overcome the disadvantage in earlier design, subsequently the RCC flat type roof structure was developed to store about 5000 t of grain. The cost of construction of such structures is excessively higher due to application of steel and cement and it takes a long time in construction.

### Warehouse With Wooden Trusses:

This type of design was found economical in hilly region where good quality wood is available in plenty. The stored products are safe if the structures have been placed away from moisture.

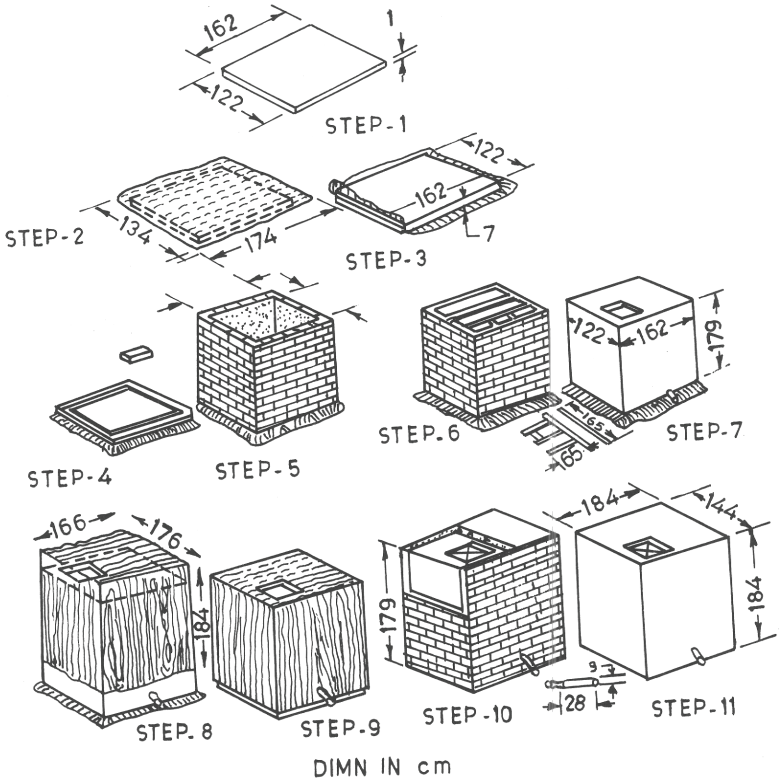


CONSTRUCTION OF PUSA BIN

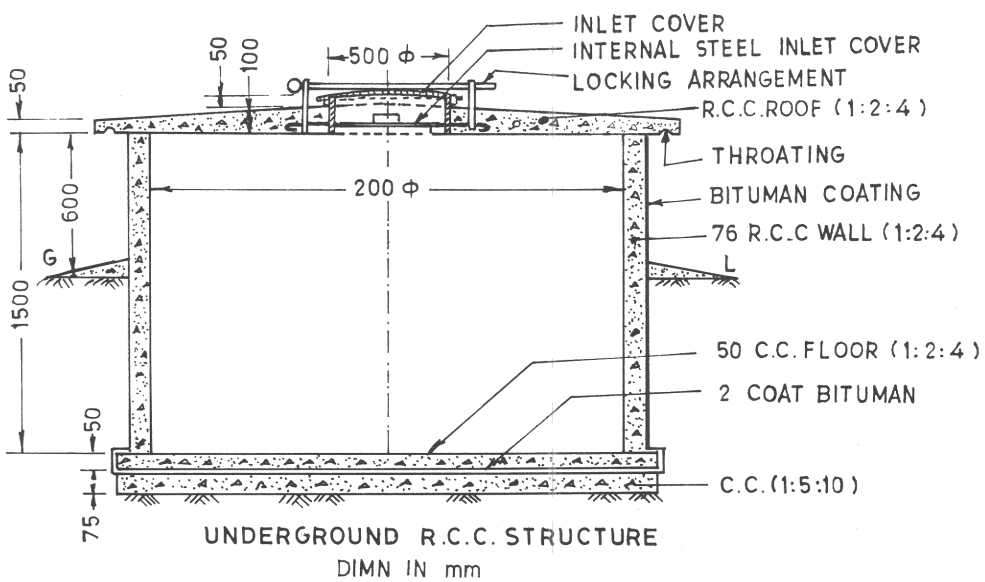


FIG. 2 BULK STORAGE STRUCTURES AT FARMERS LEVEL

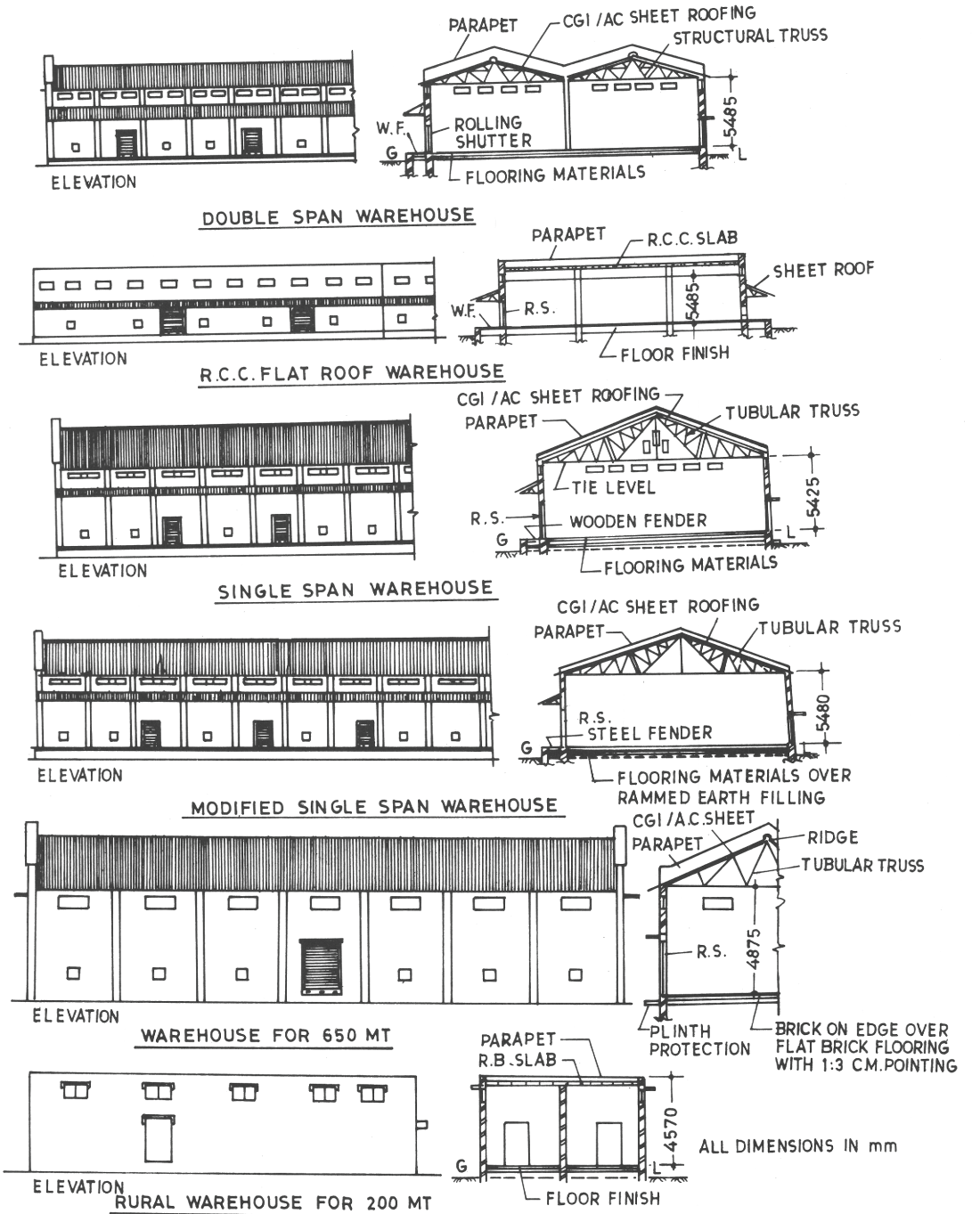


FIG.3 VARIOUS TYPES OF WAREHOUSES DESIGNED IN INDIA

**Transit Storage Shed**

These are multispan sheds constructed on a elevated ground with nominal plinth height of 4.9 m from floor level. The side walls are made of GI Sheets. This design is simple and very useful for rural storage, because of low constructional cost.

**Conventional Warehouse**

This design has been standardised for storing 5000 t of grain. The walls are made of brick/stone or concrete mansonary and roof of asbestos sheets is supported over RCC columns.

**Modified Conventional Warehouse**

The design of the conventional warehouse has been modified for saving of steel and cement. The use of mild steel has been replaced by the cold twisted deformed steel. The number of compartments are also reduced. The angle iron trusses are replaced with tubular trusses as they are lighter in weigh compared to steel trusses. The greatest advantage in this design is that no intermediate columns are provided to hold the structure as single span roof serves the purpose. This gives maximum utilisation of space without any obstruction.

The comparison of consumption of steel in trusses of different designs for 5000 t capacity is given in Table 1.

The cement and steel are two important raw materials in construction of the warehouses, hence, it is essential to economise their use. Scientific design has reduced the use of steel and cement by 60%. Use of high tensile steel for reinforcement and tubular trusses, cold rolled sections for roof purlines has brought down the requirement of steel. The use of cement has also been reduced due to application of under reamed pile foundation and elimination of base concrete for floors. The comparative cement and steel consumption in various structures in India is given in Table 2.

The alleways i.e., operational area is provided in the structures for handling of grain bags, stacking and inspection of grain stocks. The reduction in space is done by eliminating intermediate concrete columns and providing large single span roof trusses. The percentage of alleways in different types of designs has been shown in Table 3.

The final impact of improving the design of structure is on the cost of storage. The cost of construction of different designs evolved so far is given in Table 4.

## LARGE SCALE MODERN STORAGE STRUCTURES

Silos are used on large scale for bulk storage of oil seeds and cereals by the Government or procuring agencies. The silos are constructed out of concrete or metal. Metal silos are cheaper than concrete silos by 15-20% depending on their size. Generally silo system is equipped with other preparatory units like cleaning and drying equipment. Under Indian condition initially silos are 50% more expensive but this additional cost is recovered within 2-4 years. The loss of grain in such system is only 0.2% compared to 1% in godown and warehousing systems. The loss caused by rodents, insects, fungi and handling is about 0.2% compared to 8% in godown system (Sawant, 1985).

**Table 1: Consumption of steel in various designs**

| Sl. No. | Type of truss | Weight, t | Consumption of steel, kg/m$^2$ | Reduction in steel use, % |
|---|---|---|---|---|
| 1. | Structural steel truss | 50 | 16.70 | -- |
| 2. | Tubular truss with tubular purlin | 36 | 12.00 | 28 |
| 3. | Tubular truss with cold rolled form sections purlin | 31 | 10.40 | 38 |

**Table 2: Consumption of cement and steel in various designs**

| Sl. No. | Type of design | Cement, kg/m$^2$ | Steel kg/m$^2$ |
|---|---|---|---|
| 1. | RCC flat roof warehouse | 193.50 | 38.00 |
| 2. | Warehouse with structural steel trusses | 139.00 | 41.50 |
| 3. | Conventional warehouse with tubular truss | 99.50 | 23.00 |
| 4. | Conventional warehouse with tubular truss and redesign on ultimate load theory | 94.50 | 18.50 |
| 5. | Conventional warehouse by adopting revised design of floor | 74.00 | 18.50 |
| 6. | Conventional warehouse with redesigned trusses with cold rolled form sections for purtins | 74.00 | 17.00 |

**Table 3: Space required for alleways in various designs**

| Sl. No. | Type of warehouse | Percentage of alleway, % |
|---|---|---|
| 1. | RCC roof warehouse | 37 |
| 2. | Tashspan warehouse | 30 |
| 3. | Single span warehouse | 25 |
| 4. | Modified single span warehouse | 24 |

**Table 4: Cost of construction per tonne in various designs**

| Sl. No. | Design of warehouse | Cost per tonne* | |
|---|---|---|---|
| | | Indian Rs | US $ |
| 1. | RCC flat roof (5000 t) | 875 | 70 |
| 2. | Twin span warehouse (5000 t) | 785 | 63 |
| 3. | Conventional warehouse (5000 t) | 550 | 44 |
| 4. | Modified conventional warehouse (5000 t) | 450 | 36 |
| 5. | Grain warehouse (650 t) | 510 | 41 |
| 6. | Rural warehouse (200 t) | 600 | 48 |

* (The cost prevailing in 1986)

## CONCLUSION

India produces about 175 million tonnes of food grain annually but the post production losses are also high i.e., in order of 10% and out of that 6% are during storage. Major stock is stored at farmers level (70%) and remaining at organisational level. The importance of scientific storage has been very well realised in the country and many advances have taken place in development of structures at farmers as well as agency level. The efforts at farmers level had been to develop low cost structure with locally available material and could be constructed at rural level. At organisational level, the design of structures have been modified in such a way that the requirement of steel and cement has been minimised. It also facilitates maximum utilisation of space thereby reducing the overall cost of storage per tonne. The advancement in scientific design and development of stores have been found effective as it has created interest and awareness among farmers and traders to preserve the food grains safely.

## ACKNOWLEDGEMENTS

Authors are thankful to **Mr. VG Bonde** and **Mr. NG Bhandarkar** respectively for tracing the figures and typing the manuscripts of this paper.

## REFERENCES

1. Ahmad SG and SV Dwyer (1988). Ipomea cornea reinforced mud grain storage structure, Bull. of Grain Tech., Vol: 26(3): 197-207

2. Bhattacharjee S, Sonelal and TR Boruah (1986). Development and testing of hollow bamboo storage structures, Bulletin of Grain Tech., Vol: 24(3): 233-239

3. Birewar BR (1985). Recent develoment in storage structures in: Storage of agril. durables and semiperishables, Eds. Kachru, Bisht, Patil, CIAE, Bhopal, 90-93

4. Birewar, BR (1986). Underground air tight RCC structure for storage of food grains, Bulletin of Grain Tech., Vol: 24(1):38-43

5. Chouksey RG (1985). Bag and bulk storage of food grains at farmers level in: Storage of agril. durables and semie-perishables, Eds. Kachru, Bisht and Patil, CIAE, Bhopal, 55-56

6. Indian Petrochemicals Corporation Ltd. (IPCL) (1985). Plasticulture. Fourth Report of National Committee on the Use of Plastics in Agri., Govt. of India, Ministry of Petroleum, New Delhi, p: 252

7. Mackay PJ and MFS Jamieson (1970). Climate in relation to food storage, Part I, World Food Programme and Food Storage Manual, Rome, pp: 258-259

8. Mathur AP (1986). Several standard designs of warehouse storage structures and related problems of maintenance, A paper presented in the Regional Workshop on Warehouse Management of Bag Storage of Grains, New Delhi, Sept. 8-17

9. Sawant SD (1985). Modern grain storage for reducing storage losses In: Storage of agril. durables and semi-perishables, CIAE, Bhopal, pp: 25-36

10. Shukla BD and RT Patil (1988). Overview of grain drying and storage problems in India. GASGA Executive Seminar Series No: 2, Australia, pp: 7-27