RESPONSE OF THE GRANARY WEEVIL *SITOPHILUS GRANARIUS* (L.) (COL.: CURCULIONIDAE) TO CONTROLLED ATMOSPHERES UNDER HIGH PRESSURE

Sabine PROZELL and Christoph REICHMUTH

Federal Biological Research Centre
for Agriculture and Forestry
Institute for Stored Products Protection

Königin Luise-Str. 19
D - 1000 Berlin 33
Federal Republic of Germany

Abstract

This study reports for the first time comprehensively on the susceptibility of all stages of the granary weevil *Sitophilus granarius* one of the most important grain pests to high pressure treatment (**HPT**) with carbon dioxide (CO_2) and/or Nitrogen (N_2)
The experiments were conducted at 20 bar in a steel cylinder mixing manometrically together compressed CO_2 or N_2 and air when required. The composition of the gas atmosphere varied between 50:50, 75:25, 85:15 and 99:1 (vol.-% CO_2 or N_2 : vol.-% air). The exposure period at 10°C, 20°C and 30°C was 1, 2, 3 and 4 hours respectively.
The mixture with 99% CO_2 lead to 100% kill of all stages within 3 hours at all temperatures with adults being more sensitive than all other stages. Eggs -especially at 10°C- were most tolerant. The influence of temperature was not very pronounced.
Some individuals of all stages survived 4 hours exposure to carbon dioxide-air mixtures. More adults were killed with 85 vol.-% and 75 vol.-% CO_2 than with 50 vol.-% CO_2.
Exposure of all stages to N_2 (99 vol.-%) for 4 hours did not show any pronounced effect compared with untreated samples.

Introduction

Fumigants like phosphine, methyl bromide and hydrogen cyanide and insecti-cides like lindane, pyrethroides etc. for pest control are under public pressure due to their toxicity. This discussion and the growing problem of restistance lead to investigations of alternative possibilities for pest control, especially for pests in high value products like herbs and spices.

STAHL et al.(1985) described a new process for residue free pest control by using carbon dioxide under high pressure. The quality of the treated products is not disadvantageously influenced (Gerard et al.,1988, Pohlen et al.,1989).

The required amounts of carbon dioxide are minute compared with the natural carbon dioxide which is evaporating through the surface of the earth (Reichmuth, 1990).
The acceptance of this new approach is supported by the extreme short lethal exposure times in the range of minutes or few hours.

Material and methods

Experiments were performed with all developmental stages of *Sitophilus granarius*. According to Reichmuth(1986) developing stages of *Sitophilus granarius* were established by placing adults weekly on fresh wheat (kept at -20°C for 14 days in advance to kill all possible infestation) for three days at 25°C and 70% r.h.. Some adults including about 40% females were introduced on 3000 grain kernels (142 g) in 2 l glas jars. Progeny developed from 70-90% of the grain kernels. The age of the different stages was:

age 1:	0- 3 days	(eggs)
age 2:	7-10 days	(young larvae)
age 3:	14-17 days	(larvae)
age 4:	21-24 days	(larvae and young pupae)
age 5:	28-31 days	(pupae)
age 6:	2- 3 weeks	(adult weevils)

All experiments were conducted at 20 bar in a steel cylinder standing in a water bath to adjust a constant temperature. After the water bath had reached the required temperature, the stainless steel wiremesh cages (10 cm length and 1 cm diameter, with stopcock) containing 3 g of grain with the developmental stages and 20 weevils respectively, were introduced in the steel cylinder.

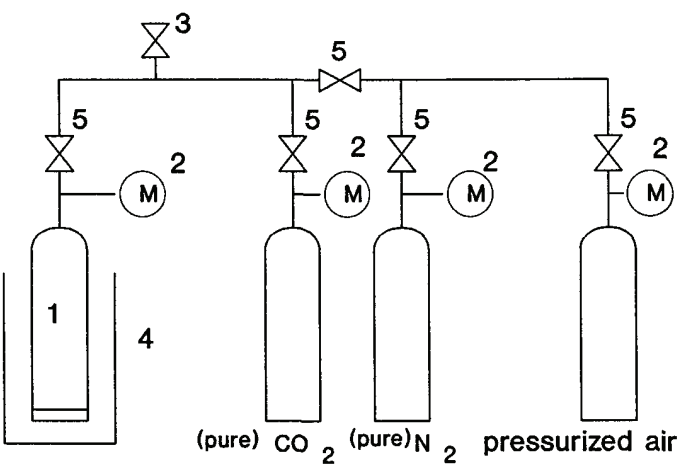

Figure 1. Sketch of the experiment
1. Experimental high pressure gas cylinder (10 l volume) 2. Manometer 3. Valve for aeration
4. Water bath 5. Constructing valves

Then it was closed. The top thread was sealed with teflonband. In all experiments the pressure of 20 bar was adjusted by carefully opening the necessary valves (Figure 1., constructing valve 5). When the carbon dioxide was introduced at a too high rate the pressure in the supply cylinder dropped due to evaporative freezing and 20 bar could not be installed properly. This was prevented by lowering the rate of gas introduction.
The experimental cylinder was pressurized using gases from high pressure cylinders.
At the end of the exposure period (max. 4 hours) the pressure was slowly released, the cages removed, the samples transferred to 26°C and 75% r.h. and observed for survivors for 8 weeks. Mortality of the adults was assayed immediately and 48 hours after the end of exposure to take into account possible narcotic effects.
In this investigation carbon dioxide under pressure (99 vol.-%; air: 0.2 bar and Nitrogen 0.8 bar) was tested at temperatures of 10°C, 20°C and 30°C and exposure times of 1, 2, 3 and 4 hour, respectively.
Nitrogen under pressure (99 vol.-%) was tested at 20°C for four hours only.
The mixture of carbon dioxide and air was applied for 1, 2, 3 and 4 hours at 20°C. The composition of the gas atmosphere varied between 50:50, 75:25 and 85:15 (vol.-% CO_2:vol.-% air). At first air was introduced.
At the end of the exposure time (max. 4 hours) the pressure was slowly released.

Results

Generally it was found, that the eggs of *Sitophilus granarius* were most tolerant. The adults were the most sensitive stage.

1- Influence of the temperature

The gas mixture consisted of air (1 bar) being compressed with carbon dioxide to 20 bar.

10°C: Surviving weevils were found only after exposure time of **1 and 2 hours** and only in samples of **age 1 (eggs)**. All longer exposures tested lead to complete kill of all stages.
(Figure 2. and Figure 3.)

20°C: Exclusively **eggs** of *Sitophilus granarius* survived the treatment being exposed for **less than 2 hours** (fig. 2.).

30°C: No survivors were found (fig. 2.).

At all temperatures the mortality of the adults was 100% after all exposure times tested (1, 2, 3 and 4 hours).
The influence of the temperature was not very pronounced. Only the age 1 (eggs) showed a slightly increased tolerance.

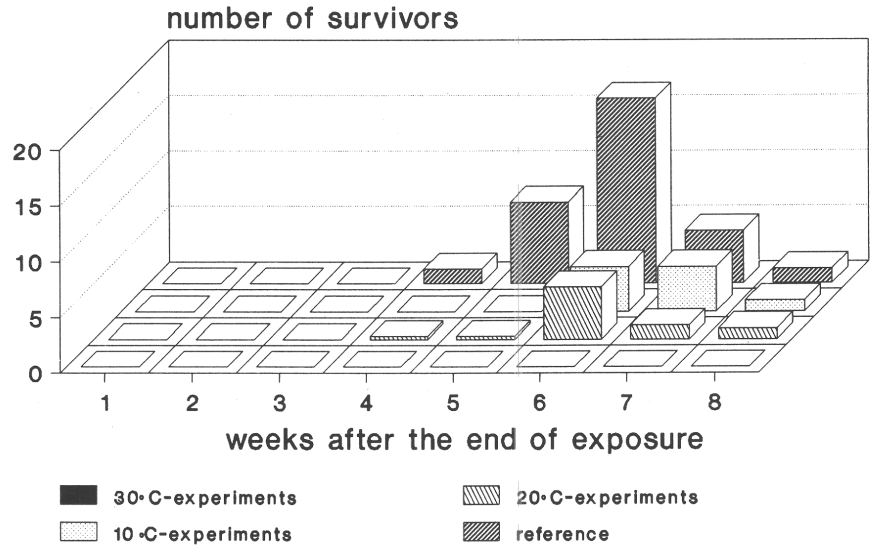

Figure 2. Surviving *Sitophilus granarius* from **eggs** being treated for **1 hour** with CO_2 under **20 bar** at **10°C, 20°C and 30°C** respectively

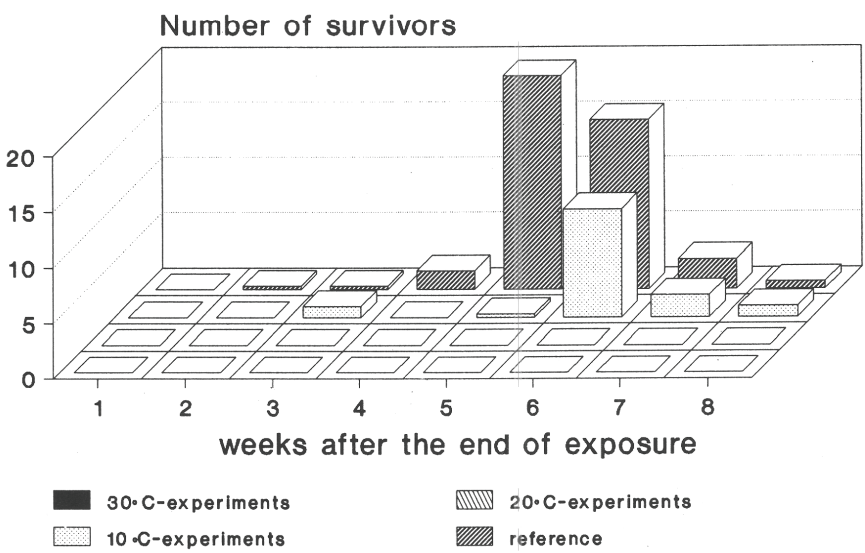

Figure 3. Surviving *Sitophilus granarius* from **eggs** being treated for **2 hours** with CO_2 under **20 bar** at **10°C, 20°C and 30°C** respectively

Even after exposure time of **4 hours** *Sitophilus granarius* survived the treatment in all carbon dioxide-air mixtures tested.

Composing the number of survivors in experiments with a carbon dioxide-air mixture of 85:15 (vol.-% CO_2:vol.-% air) is compared with the corresponding numbers in experiments with a mixture of 75:25 or 50:50, it can be derived from Figure 4. that more weevils survived in mixtures with relatively high air content.

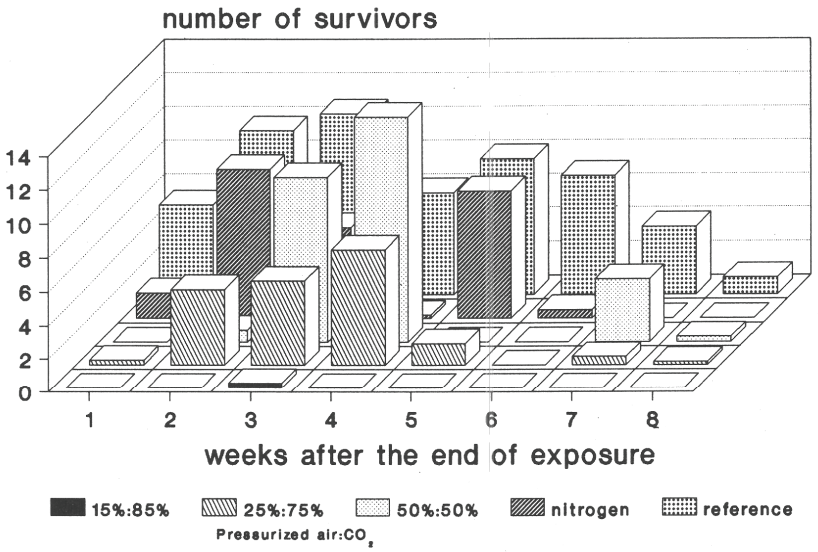

Figure 4. Surviving *Sitophilus granarius* from **pupae** treated for **four hours** with **CO_2-air mixtures**, containing different proportion of air, and with **nitrogen** at **20 bar** and **20°C**

The experiments showed that there was clearly recognizable less development from all stages of *Sitophilus granarius* exposed to the other mixtures than with a proportion of 85:15 (vol.-% CO_2:vol.-% air), even after exposure of 1 hour (Figure 5. and Figure 6.)

The mortality of the weevils treated with high pressure atmospheres increased with an increasing proportion of carbon dioxide. The maximum mortality of the weevils at 50:50 (vol.-% CO_2:vol.-% air) was 20%. At the experiments with the mixture of 75:25 **60%** of the **weevils** died after **1** and **70%** after **4 hour treatment**. An increase of weevil mortality to **90%** occured after **1 hour treatment** with the **85:15** mixture.

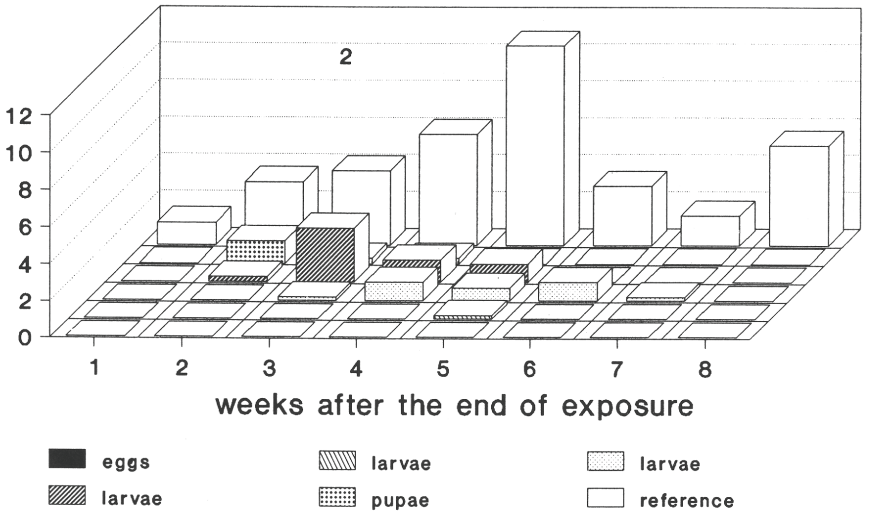

Figure 5. Surviving *Sitophilus granarius* from **all devevloping stages** treated for **1 hour** with **85 vol.-% CO_2 and 15 vol.-% air** at **20 bar** and **20°C**

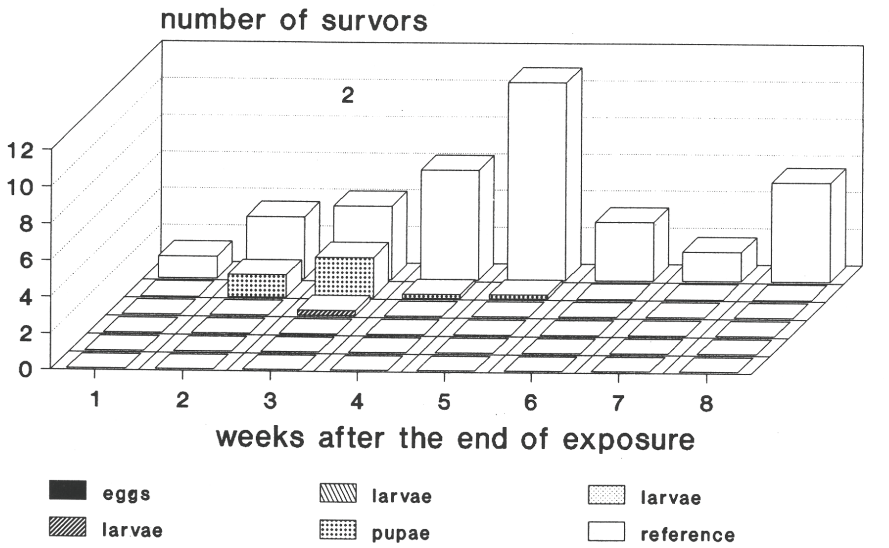

Figure 6. Surviving *Sitophilus granarius* from **all developing stages** treated for **4 hours** with **85 vol.-% CO_2 and 15 vol.-% air** at **20 bar** and **20°C**

3- Nitrogen

Exposure of all developing stages to nitrogen for four hours did not produce any pronounced lethal effect compared with untreated samples (fig. 4).
The mortality of the weevils was 10%.

Discussion and conclusions

The toxic action of some inert gases was described by Ferguson and Hawkins(1949), Johnson and Quastel(1953) and Carpenter (1954). They mentioned narcotic effects after a treatment with these gases. The death occured after treatment under high pressure following prolonged and intense narcosis. The toxic action of carbon dioxide under high pressure is not yet clear. Possibly it acts by increasing the respiration and solving in interstinal liquids (Stahl et al., 1985, Stahl and Rau, 1985) and destroying cell membranes during (rapid) decompression.
The highest mortality occured in pure CO_2 under pressure with added air having diminishing effect. The reduced toxic effect of nitrogen under pressure was described by Mitsura et al.(1978) and Pohlen et al.(1989), who like Gerard et al.(1988) report also an acaricidal effect.
The qiuck lethal effect against a broad range of different arthropods supports the implementation of this new procedure. When the pests are classified before a high pressure treatment (**HPT**) it is possible to choose the exposure time according to their tolerance (Gerard et al., 1988).
The mixture of carbon dioxide and air appears to be a further possibility for HPT of stored products, because the costs for a treatment could be reduced if time is not a restriction.

After all, in the contrary to classical insecticides and toxic fumigants this treatment can be used as preventive method to ensure pest free food and feed without any chemical residue.

References

Carpenter F.G.(1954)Anesthetic action of inert and unreactive gases on intact animals and isolated tissues. Am. J. Physiol. 178, 505-509.

Ferguson J. and Hawkins S.W.(1949)Toxic action of some simple gases at high pressure. Nature 164, 963-964.

Gerard D., Kraus J., Quirin K.W. und Wolgemuth R.(1988) Anwendungen von Kohlendioxid unter Druck zur Bekämpfung vorratsschädlicher Insekten und Milben. Pharm. Ind. 50, 1298-1300.

Gerard D., Kraus J. und Quirin K.W.(1988)Rückstandsfreie Druckentwesung mit natürlicher Kohlensäure. Gordian 88, 90-94.

Johnson W.J. and Quastel J.H.(1953)Narcotics and biological acetylations. Nature 171, 602-603.

Mitsura A., Amano R. and Tanabe H.(1973)The acaricidal effects of compressed gas treatments on the grain mite, *Tyrophagus putrescentiae*. Shokuhin Eiseigaku Zasshi 14, 511-515.

Pohlen W., Rau G. und Finkenzeller E.(1989)Erste praktische Erfahrungen mit einem Verfahren zur Druckentwesung mit Kohlendioxid. Pharm. Ind. 8, 917-918.

Prozell S. und Reichmuth Ch.(1990)Wirkung von Kohlendioxid unter Hochdruck auf den Kornkäfer *Sitophilus granarius* (L.). Mitteil. der Deutschen Phytomed. Ges. 20, 14.

Reichmuth Ch.(1986)Low oxygen content to control stored product insects. In: Proc. 4th Int. Work. Conf. of Stored-Product Protection, Tel Aviv, 194-207.

Reichmuth Ch.(1990)Schutz von Getreidenährmitteln gegen vorratsschädliche Insekten mit inerten Gasen. Getreide, Mehl und Brot 44, 166-170.

Stahl E., Rau G. und Adolphi H.(1985)Neues Verfahren zur Entwesung. Anz. Schädlkde. Pflanzensch. Umweltsch. 58, 133-136.

Stahl E., Rau G. und Adolphi H.(1985)Entwesung von Drogen durch Kohlendioxid-Druck-Behandlung (PEX-Verfahren). Pharm. Ind. 47, 528-530.

EFFETS DES ATMOSPHERES MODIFIEES A HAUTE PRESSION SUR LE CHARANÇON DES GRAINS, *SITOPHILUS GRANARIUS* (L.) ET LE COLEOPTERE XYLOPHAGE, *LYCTUS BRUNNEUS* (STEPHENS)

S. PROZELL , Ch. REICHMUTH

Federal Biological Research Centre
for Agriculture and Forestry
Institute for Stored Products Protection
Königin Luise-Str. 19, D-1000 Berlin 33

RESUME

Depuis quelques années, les insectes et les acariens infestant les produits de grande valeur, comme les aromates ou les plantes médicinales, sont éliminés au dioxyde de carbone (CO_2) à haute pression. Une élimination totale s'obtient en quelques heures.

Cette étude décrit, pour la première fois dans un sens très large, la sensibilité des individus de chaque stade de développement du charançon des grains, *Sitophilus granarius*, un des ravageurs du grain les plus importants du monde. Elle donne également quelques informations sur un important déprédateur du bois, le coléoptère xylophage à sciure brune, *Lyctus brunneus*.

Les expériences ont été entreprises à 20 bars dans un cylindre d'acier mélangeant manométriquement du dioxyde de carbone et de l'air comprimé. La composition de l'atmosphère gazeuse variait entre 50:50 (Vol. - % CO_2 : Vol - % O_2) et 99:1. A la place du CO_2 pur, de l'azote (N_2) a aussi été testé dans les mêmes conditions. La période d'exposition à 10° C, 20° C et 30° C était de 1, 2, 3 et 4 heures.

Le mélange à 99 % de CO_2 a conduit à 100 % d'élimination des individus à tous les stades du développement de l'insecte en 3 heures ; les adultes s'étant montrés plus sensibles que tout autre individu d'un autre stade. Les oeufs, particulièrement à 10° C, se sont montrés très résistants. L'influence de la température n'a pas été très grande.

A 20° C, certains individus, tous stades confondus, ont survécu 4 heures à un mélange CO_2/air. Un plus grand nombre d'adultes a été tué à 85 % Vol. - % et 75 % Vol. - % CO_2 plutôt qu'à 50 % Vol. - % CO_2. L'exposition d'individus de tous les stades à l'azote N_2 (99 Vol. - %) pendant 4 mois n'a pas donné d'effet prononcé par rapport aux échantillons témoins.

Les résultats des expériences faites sur *Lyctus brunneus* sont décrits également.