# Advances in grain drying technology in China

Zhao Simeng[1]

*Abstract*

Development of grain drying in China was introduced briefly in this paper Types and characteristics of grain dryers designed by Chinese engineers and used in China were analysed. The drying technology used in rice, wheat, corn and soybean were discussed Suggestions for future drying technology were given.

## The Development of Grain Drying Technology in China

Grain dryer was used seldom until New China was founded in 1949. A set mixed flow grain dryer with fully steel structured was designed and built by Soviet emigrant in Harbin in 1948 – 1949. And then it was called drying tower with ducts. There was a steel rotary dryer in Shanghai. The second Grain Depot used it for drying moist rice in 1950.

After foundation of New China, the State Council took grain problem seriously. The grain system imported a batch of Soviet Kuzbass Grain Dryers and held training course about using grain dryer. The batch of Kuzbass dryers was distributed in many provinces. The capacity Kuzbass was very small, only 1t/h, removing moisture 6% (Figure 1).

Beijing Grain Bureau began go use Kuzbass in 1953. It's capacity was only 1t/h, removing moisture 2 – 3%. At that time, a great deal of high moisture corn and sorghum were allocated and transported into Beijing every year. This kind of dryer couldn't meet the need of Grain Depot. The technicians of Beijing Dongjiao Grain Depot designed and built brick mixed flow tower dryer in 1957 according to the principle of Kuzbass. It's capacity was 4t/h, removing moisture 6 – 7%. Then they designed and built double-tower dryer in 1958, It's capacity was 10t/h, removing 6% (Figure 2).

### The initial stage of grain drying research (1958 – 1960)

According to the principle of mixed flow dryer and practice, the double-tower dryer with bricks was designed by the Research and Design Institute of the Ministry of Food. This dryer was nominated 59 Type Double-Tower Dryer. The Ministry of Food decided to spread this dryer in grain system all over the country. These dryers were used to dry high-moisture corn in the northeast area of China and rice in the south. Beijing Grain Bureau built six sets of double tower dryers in 1959. At that time, the technicians had made out the different drying technology ( high temperature with high-speed drying or low temperature with low-speed drying) and the drying conditions for rice, wheat, corn and soybean. They pointed out that temperature of drying medium and temperature of grain after drying should be controlled.

### The development stage of grain drying research (1961 – 1965)

Researchers of grain storage of Research and Design Institute of the Ministry of Food improved the mixed flow dryer with bricks in late 1961. They used the new angle-typed ducts with holes replacing the common ducts, added tempering section between drying section and cold section. the drying medium of different temperature were adopted for the first and second drying sections. Counter-flow air was used in cooling section for cooling grain after drying. They tested the rotary dryer for drying rice and polished rice in the Second Depot in Shanghai in 1962. Several improvements for rotary dryer were suggested in the testing report. At the same time, they studied rice drying in Lutai. The improved mixed flow drying tower with bricks in Anda in Heilongjiang province is shown in Figure 3.

The Research and Design Institute of the Ministry of Food began to study model trial of fluidized-bed dryer in 1963 They succeeded in producing fluidized and italic flute dryer with fluidized bed in 1968. This dryer was used for drying rice, removing moisture 2 – 3% in one drying process.

During 1963 Jiangsu Grain Bureau improved Rotary dryer for drying rice. Liaoning Grain Bureau produced high-temperature and high-speed dryer with screen plates for drying corn East China Chemical-Engineering Institute and Wuxi Light Industry Institute began to study spouted bed and fluidized-bed dryers.

South China Agricultural Institute developed Rotary dryer with infrared ray in 1964.

The Ministry of Food and other six Ministries built together a large mixed flow dryer of fully metal structure at State Friendship Farm in Heilongjiang Province in 1964. Its capacity was 20t/h, removing 6% moisture.

[1] P O Box 62, Zhengzhou Grain College, 450052 Zhengzhou, P R China

The Storage and Transport Bureau of the Ministry of Food led the job of Type Selection, Finalization, standardization of grain dryer in 1979. The fluidized italic-flute dryer and Rotary dryer had been finalized the design in 1982 and 1983.

Heilongjiang Grain Bureau sponsored successfully the study and design of integrating use of mixed flow dryer with brick structure It usually consisted of 3 to 4 towers in series for drying high-moisture corn. Jilin Grain Bureau developed steam dryer which consisted of 4 to 5 towers in series for drying high-moisture corn.

After 1977, the Ministry of Agriculture developed small capacity grain dryers in the countryside and produced many fixed-bed dryers, batch dryers and continuing flow dryers The capacity was less than 5t/h at 3% moisture removal.

In 1985, grain system possessed 1875 sets of different dryers. In the meantime, there were 5750 sets of small grain dryers in China countryside

In this period, dryers were almost all built with bricks. It was difficult to mechanize the operation. The applied research on grain dryer was noticed, but basic research was ignored.

### Rapid development stage of grain drying technology (1986 – present)

After 1986, grain system imported cylinder cross flow grain dryer from U. S. A. and mixed flow grain dryer from France. In the meantime, Chinese engineers began to design new grain dryers which fit our country's conditions. For example, Jilin Grain Bureau developed cross flow grain dryer, Heilongjiang Grain Bureau developed mixed flow grain dryer, Zhengzhou Grain Research and Design Institute developed concurrent-flow dryer. These dryers may remove corn moisture from 30% to 14% in the harsh climate condition

The main characteristics of these dryers are:

- They are fully steel structured, with no bricks
- The capacity and moisture removing ability of the new dryers have been greatly improved. The maximum through put is 25t/h at a moisture removal of 15%.
- These dryers are equipped with indirect heating hot air furnaces which produce clean hot air, the grain will never be polluted.

After 1986, grain system actively studied mechanical ventilation of grain. The grain ventilation is the main technology of safety storage grain. The mechanical ventilation of grain is widely used in State Grain Depots now.

At the moment, universities and research institutions are engaged in basic research of grain drying. China Agriculture University studies the mechanism of grain drying and mathematical modeling of grain drying Zhengzhou Grain College focuses on grain ventilation with ambient air.

## Types and Characteristics of Grain Dryers Used in China Grain System

### Grain dryer with high temperature and large capacity

*Steam dryer*

The steam dryer was developed in 1970s for drying high moisture corn. Figure 4 is the sketch of steam dryer. There are 3 heating sections and 3 drying sections in each drying tower. Each heating section contains a series of steam pipes, the diameter of pipe is 42 – 48 mm. Each drying section contains a number of inlet /outlet air ducts. Each drying tower removes only 2 – 3% moisture, a steam dryer usually consists of 5 to 6 towers in series for drying high moisture corn.

Figure 5 is technological diagram of steam dryer.

*Rotary grain dryer*

In the early 1950s, the grain depots in China used the rotary dryer. In the 1960s, the rotary dryer had been improved. We finalized the design of rotary dryer in 1983. The rotary dryer is not only convection heat transfer dryer, but also complex heat transfer dryer.

The diagram of rotary dryer is shown in Figure 6.

Characteristics of rotary dryer include: (1) Rapid drying with high temperature Air temperature is 200℃ when drying rice with a moisture removal of 1.5 – 2% in the cylinder. The temperature of rice after drying is 60℃. (2). Low heat consumption. The specific heat consumption is about 4518 kJ/kg$H_2O$ or 1070 kcal/kg$H_2O$.

*Fluidized bed dryer*

The fluidized bed dryer is different from conventional fluidized bed dryer The basic characteristic is the fluidized plate with fluidized area and boiled area.

The diagram of the dryer is shown in Figure 7.

Figure 8 is the flow chart of a fluidized bed dryer

The dryer's characteristics include: (1) Simple structure, easy operation, small investment. (2) The through put of dryers at a moisture removal of 1.5 – 2% are 5t/h, 7.5t/h, 10t/h, and 15t/h, respectively. (3) The heat consumption is 5330 kJ/kg$H_2O$.

*Mixed flow dryer*

It is an old type dryer. The mixed flow dryer was used in China early. The diagram of the dryer is shown in Figure 9. The basic principle of dryer is that grain flows from top to bottom within dryer by gravity. Hot air gets into ducts, penetrates into grain and then dries grain. The exhaust air is removed by neighboring two layer ducts. Hot air heats and dries grain with cross flow, concurrent flow and counter flow way. So the dryer is nominated as mixed flow dryer.

The arrangement of the ducts is shown in Figure 10.

Now the capacities of mixed flow dryers are 10t/h, 12.5t/h, 15t/h, 20t/h, 25t/h, and 35t/h.

Characteristics of mixed flow dryer consist of: (1) moisture removal could be 10 – 15% at an ambient air temperature of –20℃; (2) grain with an initial moisture content of 30 or greater can be dried down to 14%; (3) The specific heat consumption is 7115 – 9210 kJ/kg$H_2O$.

*The concurrent flow dryer*

The concurrent flow dryer was developed in late 1980s. Normally it has 3 drying sections and 1 cooling section, Figure 11 shows a typical concurrent flow dryer.

The different capacities of concurrent flow dryer are produced in China (7.5t/h, 10t/h, 15t/h, 20t/h, 25t/h).

The Characteristics are: (1) The cross section of the dryer is usually made square shaped; (2) moisture removal could be 10 – 15% at an ambient air temperature of –20℃; (3) The hot air temperature of the first drying section may be over 200℃; (3) The heat consumption is 6280 – 10884 kJ/kg$H_2O$.

*The cross flow dryer*

The cross flow dryer has two types. The first is rectangular, the second is cylindrical The first has two rectangular columns. The hot air traverses the grain in the columns. The model of the cross flow dryer is shown in Figure 12. The first dryer is produced in different capacity (5t/h, 7.5t/h, 10t/h, 15t/h, 20t/h, 25t/h).

Its characteristics are: (1) Simple structure; (2) moisture removal could be 5 – 8% at an ambient air temperature of –20℃; (3) The heat consumption is 8370 – 10465 kJ/kg$H_2O$.

The second cross flow dryer has a column consisting of two layers of concentric cylindrical screens. The grain flows from top to bottom in the column by gravity. Figure 13 is the diagram of the second cross flow dryer.

The through puts of this dryers are 7.5t/h, 10t/h, 15t/h, 20t/h, 25t/h respectively.

The characteristics of the second dryer include (1) Simple structure; (2) moisture removal could be 10 – 15% at an ambient air temperature of –20℃; (3) The heat consumption is 8370 – 10465 kJ/kg$H_2O$

### Furnace used in dryer

When high moisture corn is dried, the dryer needs a furnace, recently, the China furnace is widely used. It consists of a chain transmission grate burner and heat exchanger

The furnace structure is showed in Figure 14. The coal burns at the chain grate and becomes gas which enters heat exchanger, finally gas is removed from chimney. The outdoor air becomes hot air through the heat exchanger. Then hot air enters to dryer. When the grain initial moisture is small (less than 20%), and the capacity of dryer is less than 10t/h, the manual operated furnace is usually used. Figure 15 shows the manual furnace. It consists of a fixed grate, a combustion chamber and a precipitation chamber. 30 – 200 kg coal is burned in the fixed grate furnace per hour The rice husk-fired furnace is shown in Figure 16 It consists of inclined a fire grate, a combustion chamber and a precipitation chamber 75 – 175 kg rice husk is burned per hour. The manual operated furnace is always designed individually. The heat efficiency is 65 – 70%.

The coal-fired chain furnace has been finalized The heat supply capacity of the furnace are: $2.5\times10^6$ kJ/h, $5\times10^6$ kJ/h, $7.5\times10^6$ kJ/h, $10\times10^6$ kJ/h, $15\times10^6$ kJ/h, $20\times10^6$ kJ/h, $25\times10^6$ kJ/h, $30\times10^6$ kJ/h. The heat efficiency is 70 – 75%.

*Low temperature drying equipment (mechanical ventilation equipment)*

There are many types of mechanical ventilation equipment in China. It is discussed in special monograph. All different ventilation equipment in the grain depots can be used for grain drying as fixed-bed dryer by means of application of heated air The grain warehouse with ducts is shown in Figure 17. If the grain moisture content is less than 18%, its moisture content may be reduced to 13 – 14% in a few days' aeration. If the ambient temperature is low, the supplemental heat can be used to increase the air temperature by 5 – 10℃. The supplemental heating equipment is shown in Figure 18. It consists of furnace and heat exchanger. It may supply 20900kJ/h heat at a coal consumption of 10 – 13 kg per hour.

## Grain Drying Technology

There are drying technology for rice, wheat, corn and soybean in China. The state grain depots receive rice with moisture content in the range of 16 – 18%, moisture removal by drying is only 3 – 5% Fluidized bed dryer, concurrent flow dryer, rotary dryer are usually chosen for drying rice.

Figure 19 is the technological flow chart of rotary dryer for drying rice. There are a preliminary cylinder cleaner, a H·Y 15 rotary dryer and a counter flow cooling equipment in the chart. The moist rice after cleaning is loaded into dryer and after drying is transferred to the cooling equipment. And then rice can be stored in the grain warehouse after cooling.

The temperature of drying medium used is 150℃ during the drying process The temperature of rice removing from dryer is less 60℃. The rice may also be decreased 2% moisture in the dryer, 1 – 1.5% moisture in the cooling equipment.

Figure 20 is the technological flow chart of concurrent flow dryer used for drying rice. The rice after cleaning directly gets into a concurrent flow dryer, the rice can be decreased moisture 6% in the dryer, the medium temperature in the first drying section is 110℃, in the second drying section is 100℃, the rice temperature after

drying is less 60℃

The high moisture corn is mostly produced in Northeast, Inner Mongolia and Xinjiang The grain system always receives corn with a high moisture content of 25 – 30%, especially in Heilongjiang sometimes with moisture content of 35% It is difficult to decrease the moisture content of corn to 14% in one drying pass, if the initial moisture content is very high. Presently, we can dry corn with 30% moisture to 14% through one pass of dryer in the mixed flow, concurrent flow and cross flow dryers.

Figure 21 is the technological flow chart of concurrent flow dryer for drying corn. The corn after cleaning is loaded into dryer by elevator, through 6 drying sections and 1 cooling section grain moisture can be decreased from 30% to 14% The air temperature adopted in the first drying section is 180 – 200℃. Then the air temperature is decreased gradually. The air temperature used in the sixth drying section is 100℃ The corn temperature after drying is less than 60℃.

The soybean is mainly produced in the Northeast and Huang-Huai-Hai plains in China The soybean moisture may be 20% after harvest The moisture content for safe storage is less than 13% soybean is very difficult to dry The low temperature of medium is used in soybean drying. When mixed flow dryer is used, the medium temperature is 60 – 90℃. The soybean temperature after drying is less than or equal to 35℃

Figure 22 is the technological flow chart of soybean drying of two concurrent flow dryers. The soybean after cleaning enters into the first dryer, the medium temperature of the first section is 90℃, the second drying section is 70℃ or less. The soybean temperature after drying is controlled in 35℃

## Prospects of Grain Dryers in China

Although we have obtained a lot of achievements on study and design of grain dryers, but we have not caught up with the advanced level in the world. The major works in future are:

1 The grain system should build 1 – 2 State Grain Drying Laboratory in future. We need strengthen study and application on basic theory of grain drying, mathematical modeling and automatic control

2 We should promote the production of grain dryer to be of seriation, standardization, improve the quality of raw material and the manufacturing technology.

3 We should build the training base of grain drying technology on the base of any grain school in the Northeast region. We should improve training for the operators and managers of grain dryers to make full use of the dryers.

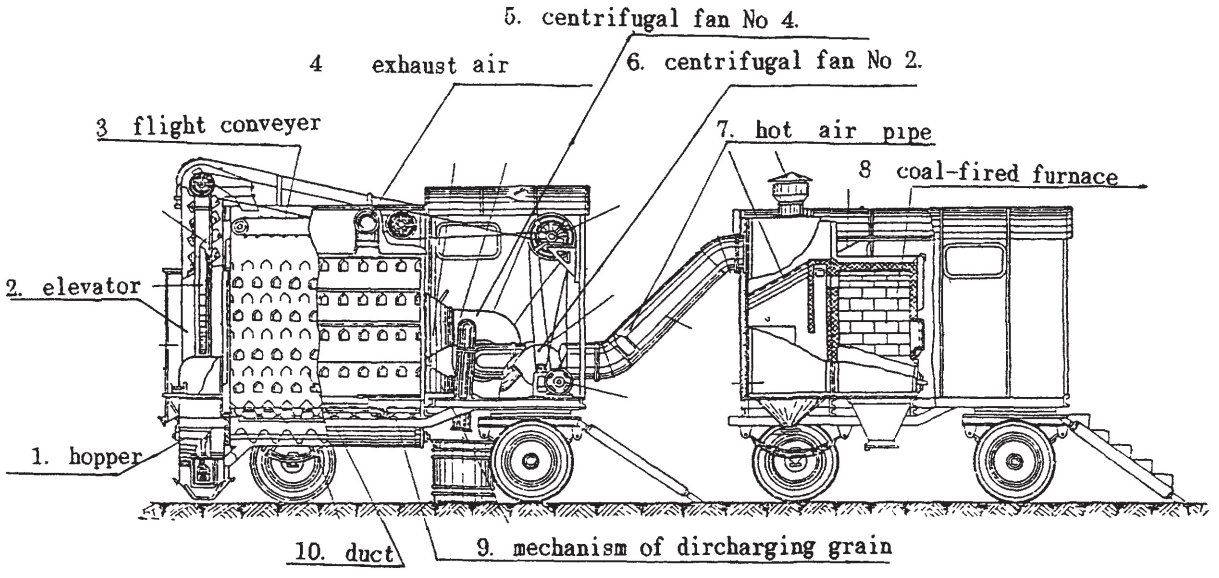


**Fig. 1.** Movable Grain Dryer —Kuzbass.

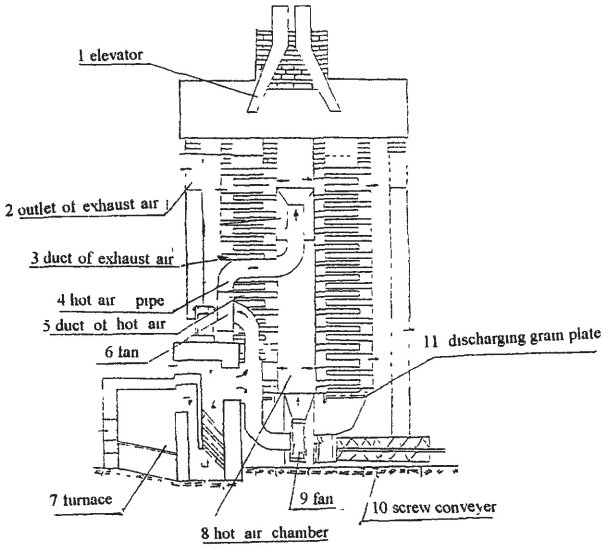


**Fig.2.** "59-double tower dryer"

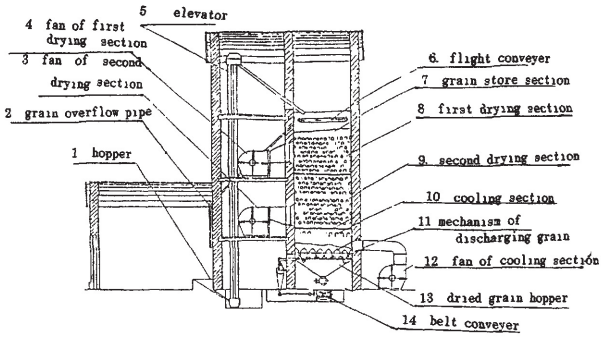


**Fig.3.** Anda tower dryer with bricks

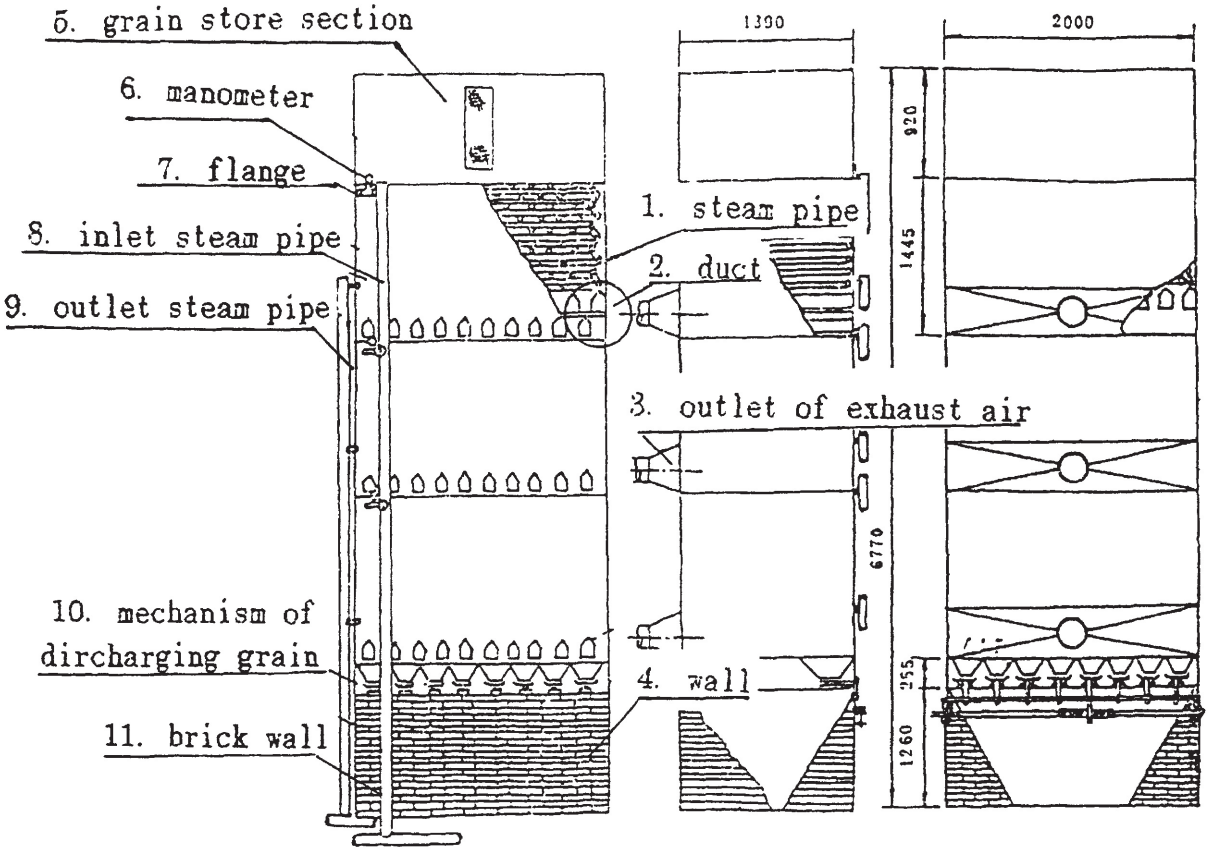


**Fig.4.** steam dryer

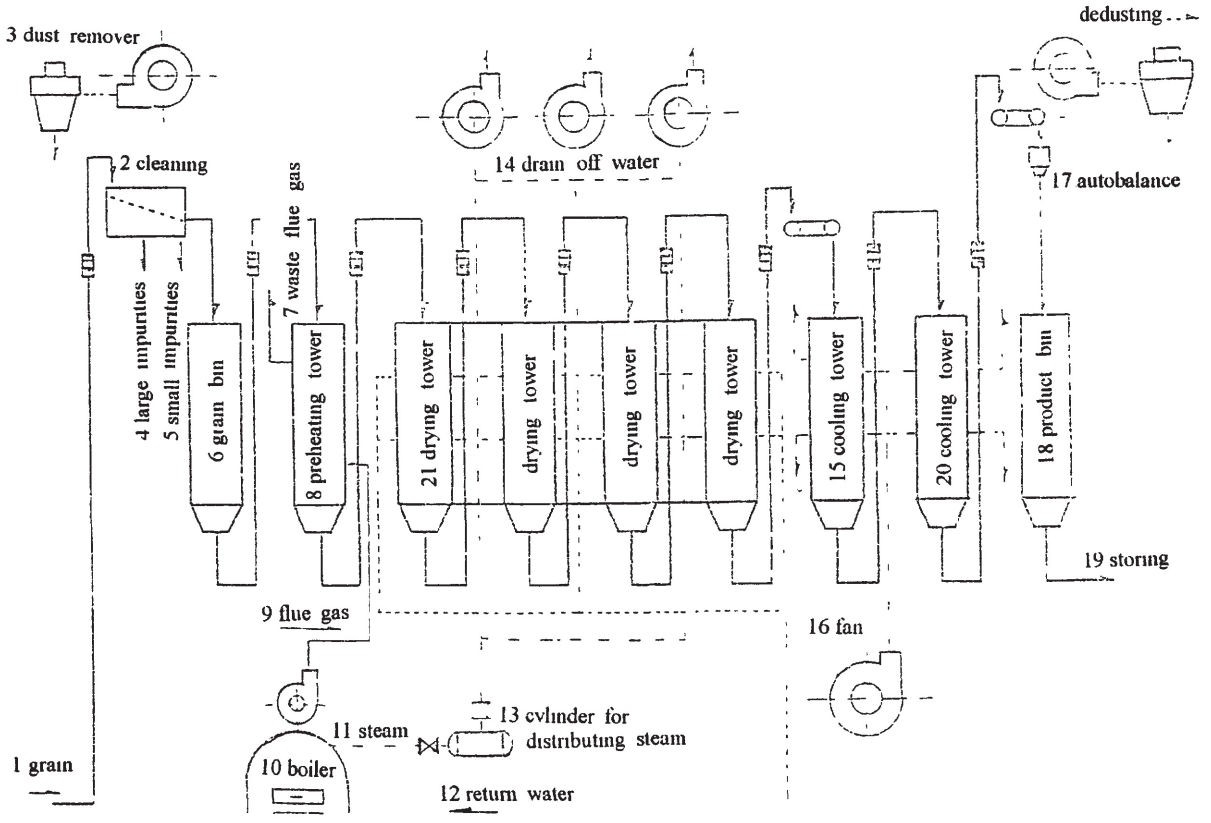


**Fig. 5.** Technological flow chart of a steam dryer

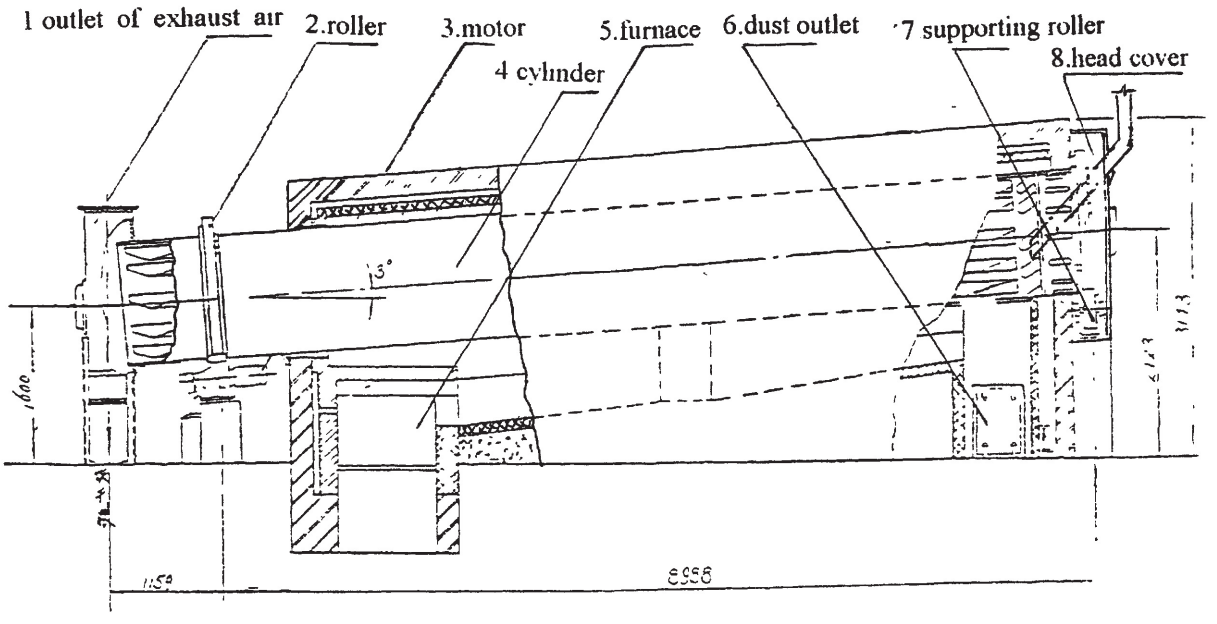


**Fig. 6.** Rotary dryer.

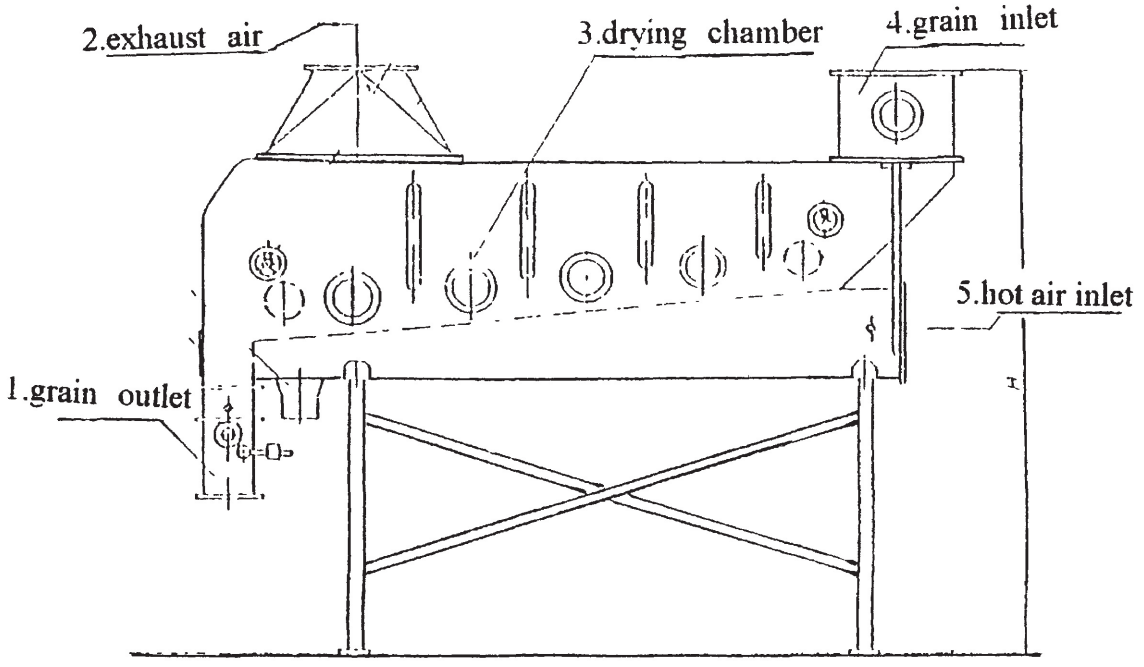


**Fig.7.** Fluidized bed dryer

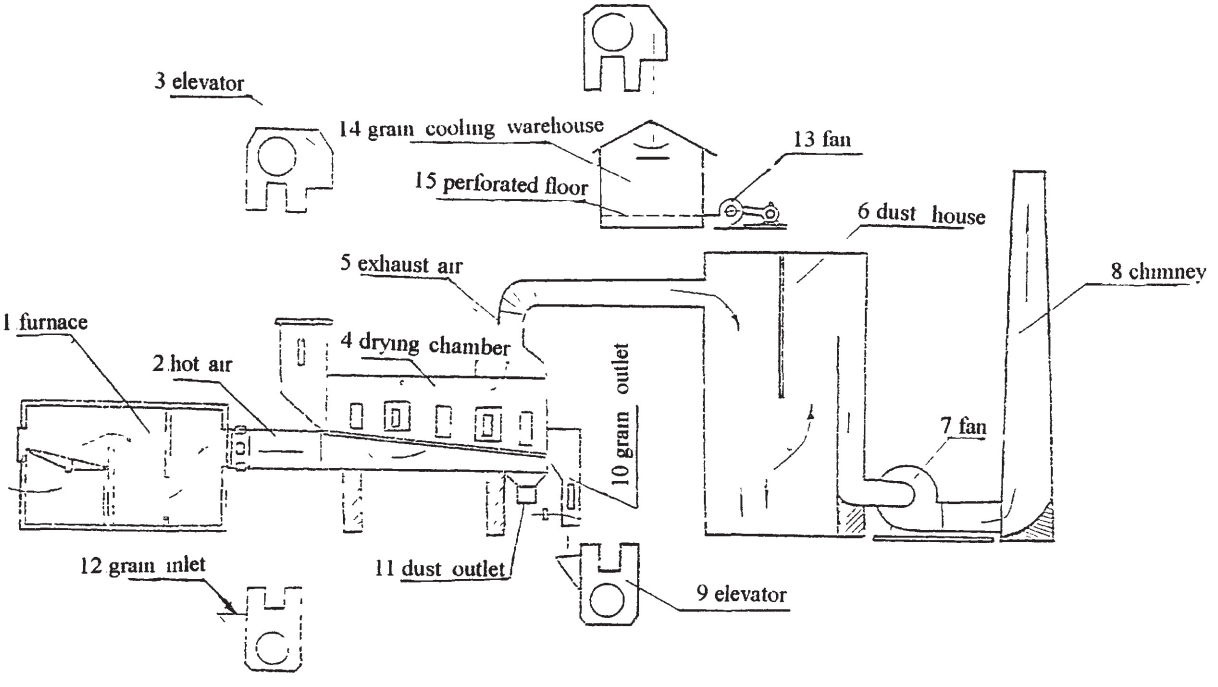


**Fig.8.** Flow chart of a fluidized bed dryer

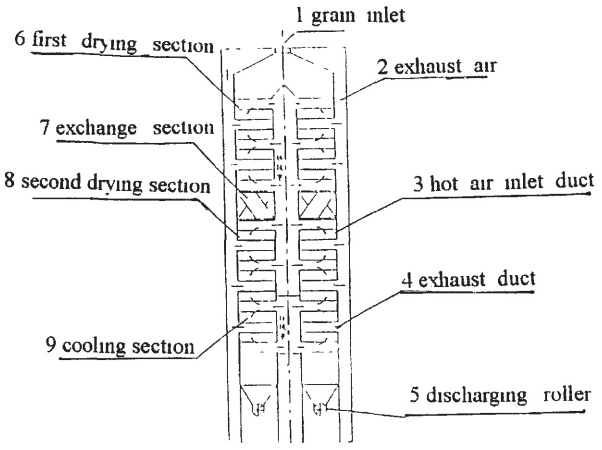


**Fig.** 9. Mixed-flow grain dryer

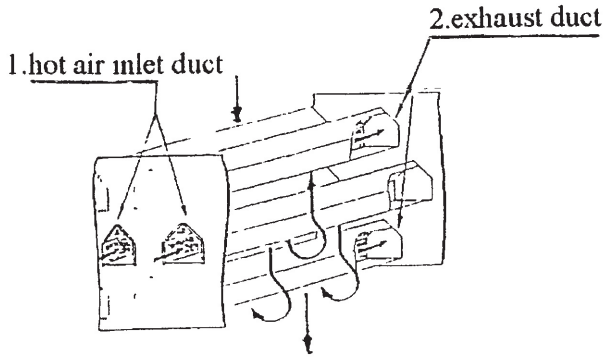


**Fig.** 10. Ducts of mixed-flow dryer.

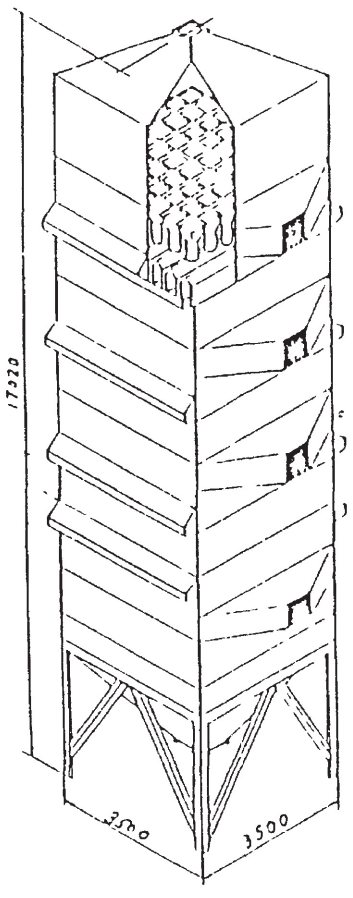

**Fig.** 11. concurrentflow dryer

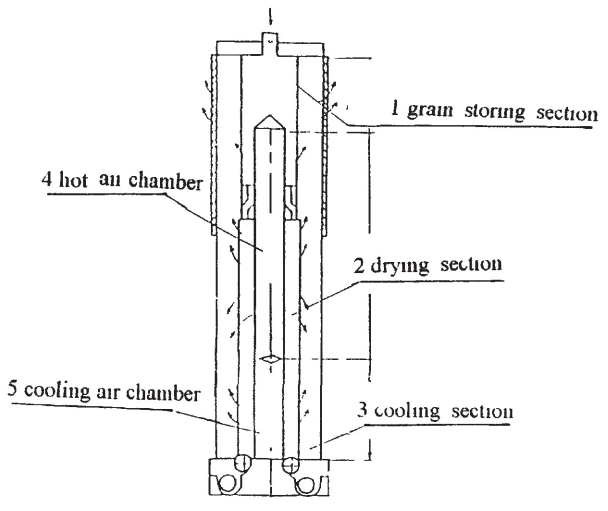


**Fig.** 12. Crossflow dryer with screened column

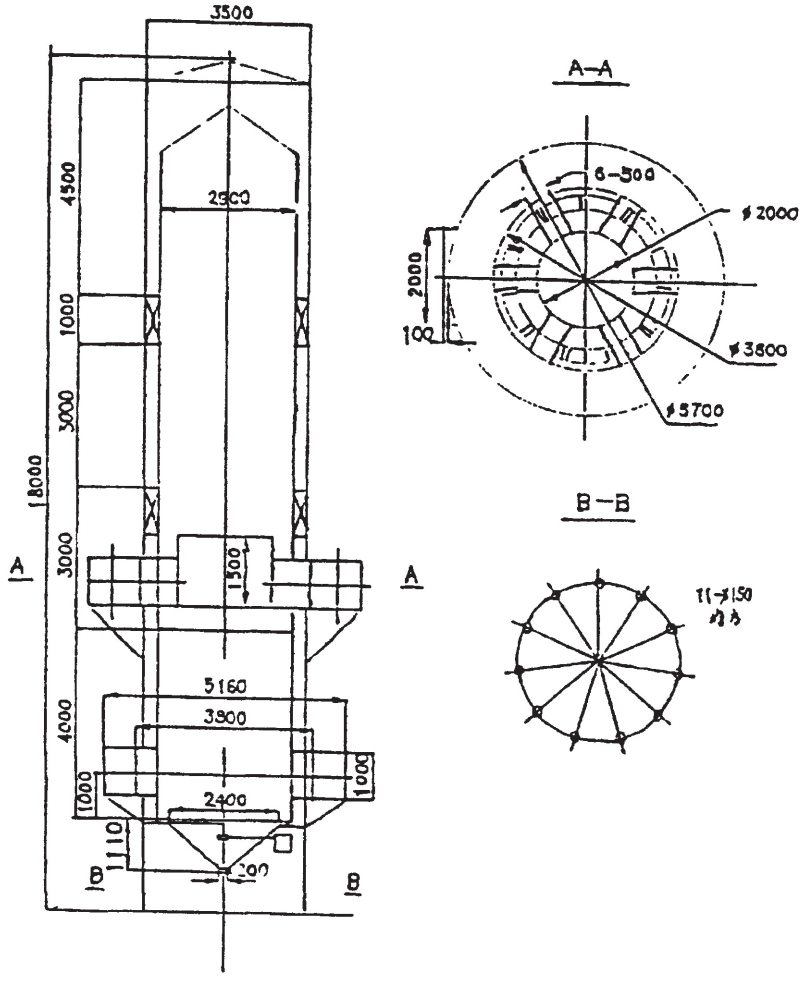


**Fig. 13.** Cylinder cross-flow dryer.

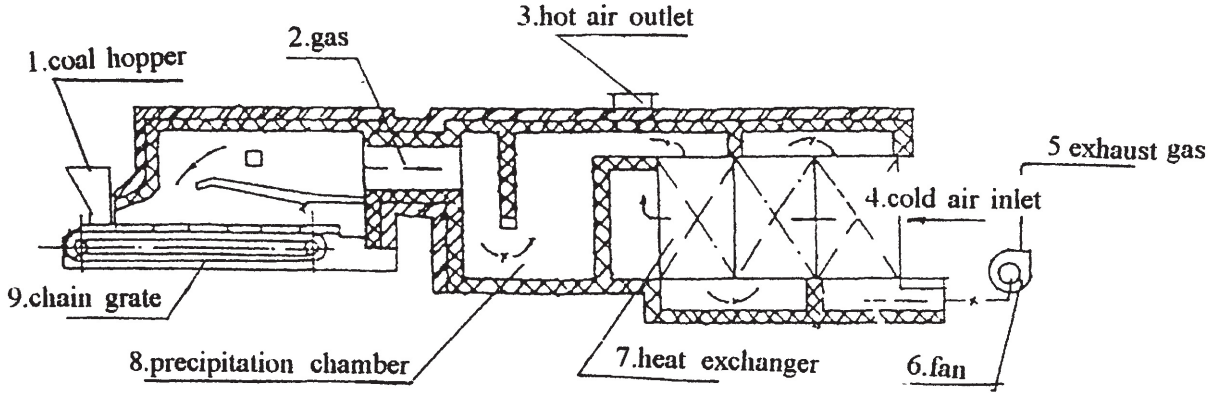


**Fig. 14.** Furnace with chain dryer.

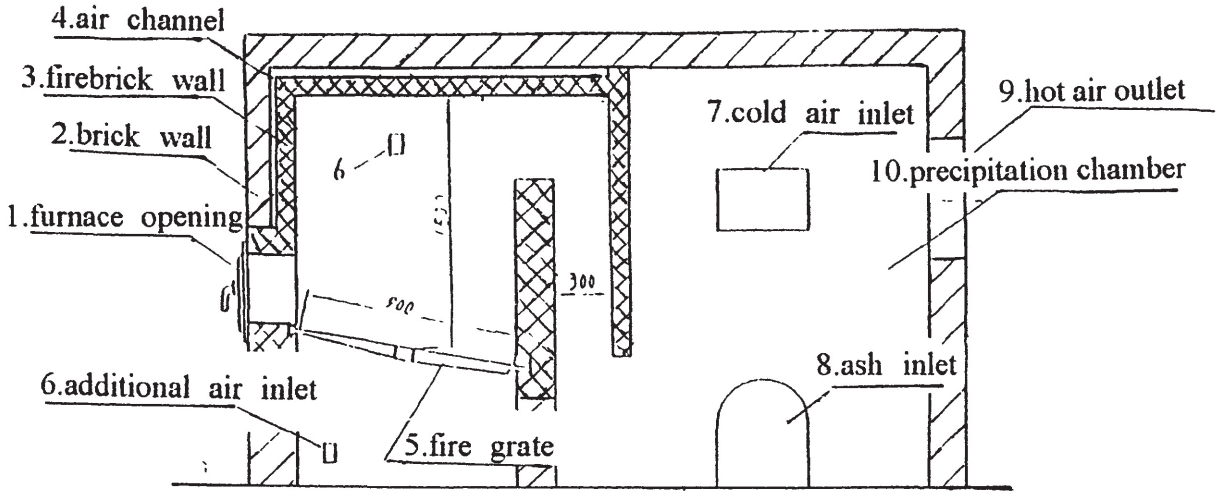


**Fig.** 15. Fixed grate furnace.

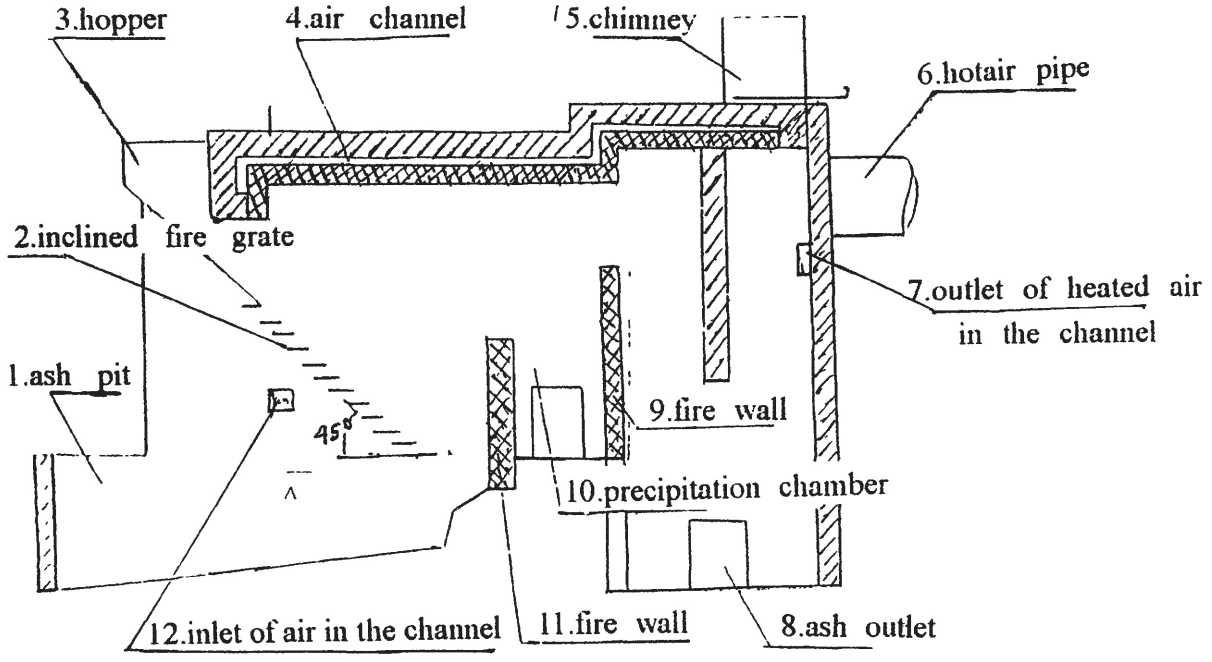


**Fig.** 16. Fixed grate furnace.

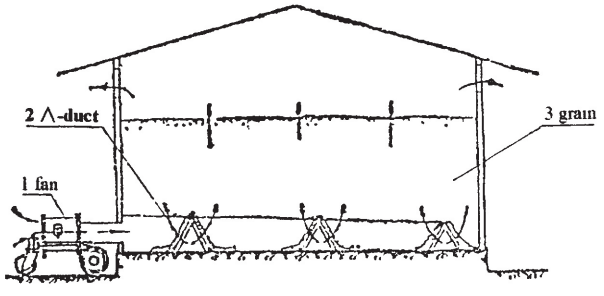


**Fig.** 17. Aeration system.

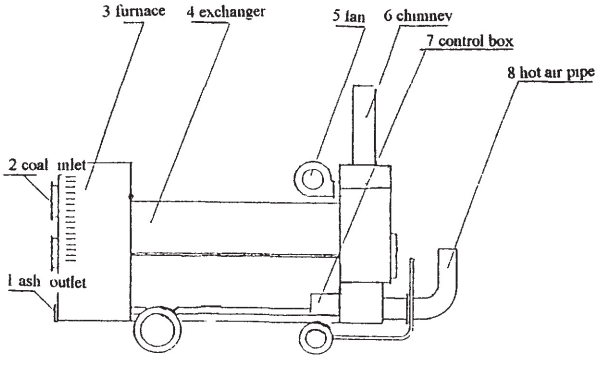


**Fig.** 18. Supplementary heating equipment

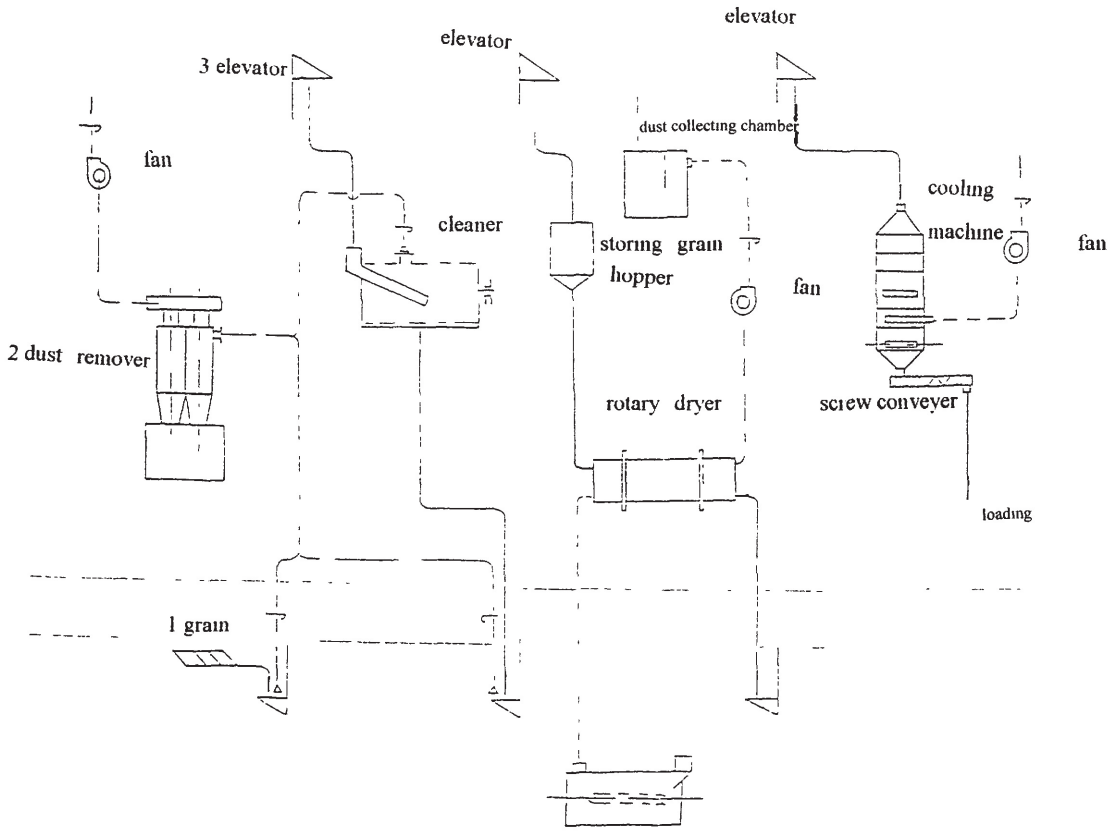


**Fig. 19.** Technological flow chart of rice drying of rotary dryer

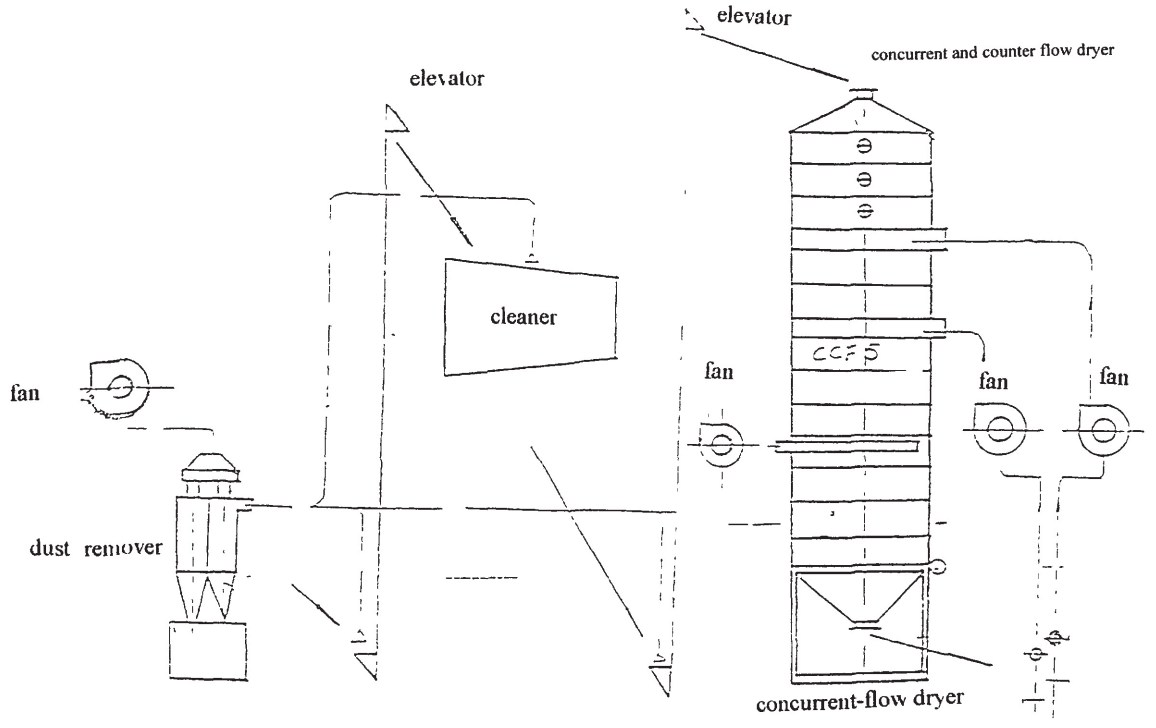


**Fig. 20.** Technological flow chart of rice dryer of concurrent-flow dryer

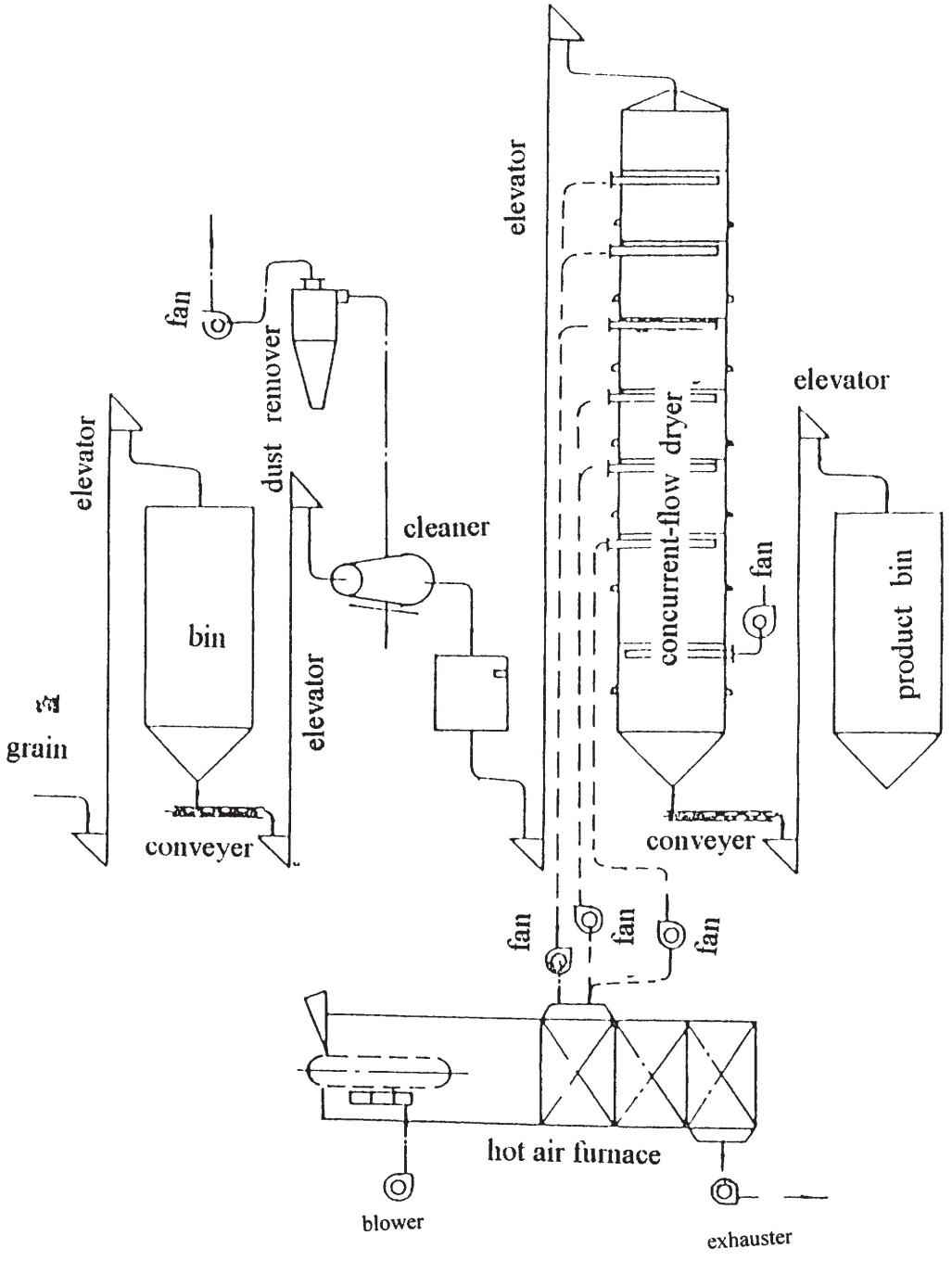


**Fig. 21.** Technological flow chart of corn drying of concurrent-flow dryer

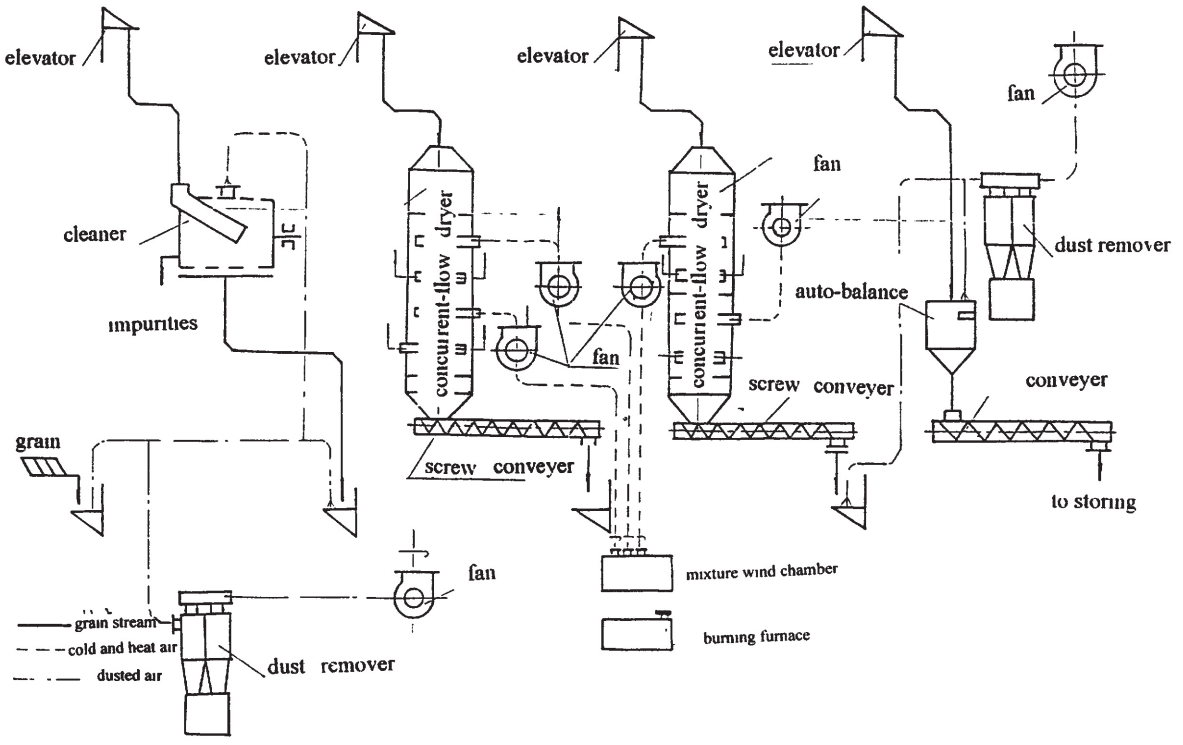


**Fig. 22.** Technological flow chart of soybean drying of two concurrent-flow dryer.