A study on grain barns in coastal area of Hebei Province

Wang Huimin, Deng Fengxiang, Qian Liyan, Du Dewei and Zhu Zhu[1]

Abstract

In coastal area of Hebei Province, vertical cylindrical silos or steel plate barns are usually used to store grain This kind of storage is convenient for loading and unloading, transportation, and suitable for short-term storage of grain In recent years, state grain storehouses have been built near the port and warehouses appear. Such storehouse has a capacity of large quantities of grain storage with less occupation of land, and its lump-sum investment is also large. If storing in piles in open areas, the lump-sum investment will be less, but it occupies large areas It is proved through test that, using the improved and reinforced concrete barns to store grain can ensure the corn stored in coastal area passing the summer safely, and can reduce not only the cost, but also the occupation of land, and get better economic and social benefits

Introduction

There is a long coastline and many seaports in our country, so much attention has been given to the grain storage in the coastal areas In the past, grain storage used to be transition storage in coastal areas So barns are usually constructed with high cylindrical barns (cylindrical barn with steel reinforced concrete structure or the barn with steel walls) or the grains are packed in bags piling outside, such barns are convenient for loading and unloading, transportation, and are used for short-term storage

In recent years, grains have scored consecutive bumper harvests. Grain warehouses were also built near the port, and warehouses appeared too. So it is necessary to study which type of grain storage suits the coastal area in Hebei Province Our project was carried out at Long Jiaying Grain Warehouse which is stationed by Qinhuangdao City, Hebei Province Our experiment results have proved that modified reinforced bin was an excellent choice for storing corn in the coastal areas of Hebei Province. Thus 2000 tons corn passed summer safely

[1] Jilin Grain College, Jilin Province, China, 130062

Experimental Materials and Methods

Grain for experiments

The tested grain in reinforced bins is the second-grade, dry corn weighing 2000 tons. The average moisture was 13.5% As to the check pile storage, the test material is also the same kind dry corn weighing 60 tons with average moisture of 13.8%.

The structure of the storage bin

The storage barn is a modified and reinforced concrete bin, its structure is as follows:

The base of the bin

The base of the barn is round with diameter of 7 meters. It is constructed in two layers with square stones and it has 6.9 trumpet natural airways that are large towards south-west and small towards north-east. The bin base is made up of mats covered with propylene braiding of 7m diameters

The body of the bin

On the base of the bin, 7 reinforcement blocks (the specification is 3.14 × 1.2 meter, space between steel bars is 10cm) are used to splice a circle with perimeter of 22 meters Altogether 28 blocks are used to make the body of the bin, the height of the bin is 4.8 meters. Inside the bin, the worn mats, coarse mats or the waste propylene braiding are used to be the underlining with the principle of preventing grain from coming out. The bin is being built while the grain is entering So when the bin is completed, it is full of grain. After it is full, mats are hung around the circle to be as the surface cover around the bin and in all round of the bin are then fixed 30 – 40 bamboo poles with 4 meters long (diameter of the bamboo poles is 7 – 8cm for the root end and 4 – 5 cm for the small end around the surface cover) As for the adjacent two poles, one is upside down and the other stands. Another barn cover mat is hung over the bamboo pole to make an outer cover So an air-protecting layer with 8 – 10cm wide is produced between two bin covers Its functions are: (a) to stop the rain coming into the barn directly and prevent moisture increasing; (b) to slow down the transition of heat from outside to inside.

The cap of the bin and vent cover

The cap of the bin is made up with tarpaulin by 21 counts 8 × 8 pure cotton thread. Comparing to straw mat cap, such

cap is capable of ventilating and waterproofing and has strong ability of resisting fire and wind. In the centre of the cap, there is an air vent of 50cm diameter Around the air vent, a vent cap made up with galvanised iron is fixed at the vent so as to diffuse the moisture and heat in the bin (Refer to the sketch of the modified reinforced barn.)

Control pile

The control pile used is the outdoor pile of bags full of corn. The base of the pile is also made of square stones with mats on There was 60 tons corn stored in a pile. After piling, some shaped propylene sheets are used to make the inner layer at the middle and lower part of the pile, then cover the whole pile with tarpaulin.

The climate condition during experiment

The climate conditions during experiment are listed in Table 1

Table 1. Climatic conditions.

1997 (month)	Mar.	April	May	June	July	Aug.	Sep	Oct.
Monthly average temp. (℃)		11.8	17.0	24.3	25.0	25.0	21.0	14.0
Monthly average humidity (%)	52	57	79	84	81	67	61	
Monthly average precipitation(mm)		27.0	78.4	145.8	265.3	160.5	59.8	19.3
Monthly average wind speed (m/s)		3.5	3.0	2.4	2.5	1.9	2.2	2.3
Monthly most wind direction	W.	S.W.	S.W.	S.	S.W.	S.W.	N.	N.W.

Experiment method

Corn was brought to store from May 3 to May 8, 1997. Handling method is as follows: The corn is dried in the drying machine, then, screened, and screened again when putting into storage There is a sprayer at the end of the conveyor to spray Fenitrothion solution (only spray on 2 tons of corn both at the bottom and the top surface) with concentration of 1.5% at a dose of 0.5kg/T. The 2,000 tons of corn supplied are stored in 13 barns, each for 156 tons. Corn was brought to the control pile on May 2, 1997. The corn was bagged and piled. Fenitrothion solution with the same concentration and dosage as above was sprayed on the surface of the bag.

Experimental Results

Through one year's observation, the temperatures of the corn in the test barn were in normal distribution, and the highest temperature of the corn reached 30℃ in August, while the air temperature reached 33℃, and the monthly average temperature was 29.3℃. The corn temperature in the control pile was 30.8℃ and monthly corn temperature reached 30.2℃ Grain moisture content of experimental bin dropped to 1.2% form 13.5% with a loss of 1.2% in the test barn while it reduced from 13.8% to 11.7% with a loss of 1.2% in the control pile It could be found from Table 2 that after six months' storage the fatty acid increased by 6.85 KOH mg/100g in the barn, while it increased by 3.77 KOH mg/100g in the pile. The viscosity of grain stored in barns decreased by 1.75 (cst) and viscosity of grain stored in the pile decreased by 2.21 (cst) The possible reason is that the grain temperature in piles was high and the moisture content was low.

Table 2. Variation of grain quality factors.

	Type of storage	Barn storage		Pile storage	
	Test time (1997)	May 10	Oct 16	May 10	Oct 16
Test Content	Fatty acid valve (KOH mg/100g)	25.05	31.9	24.43	28.2
	Viscosity (cst)	4.64	2.89	4.9	2.7
	Moisture content (%)	13.5	12.3	13.8	11.7
	Germination factor (%)	0	0	0	0
	Grain grade	second	second	second	second

The test results have demonstrated that the grain stored in two types mentioned above didn't change its grade, germination factor, colour and taste. And there was no insect and mould development

The data in table 1 show that the climate of coastal area in Qinhuangdao City is marine climate in summer. It is muggy, rainy hot with wind. The top air temperature appears in July or August, the monthly average temperature reaches 25.3℃, and top humidity is in June, monthly average humidity is 0.4% Most precipitation is in July, monthly average precipitation is 265.30mm. All these conditions are unfavourable to grain storage As for the speed and direction of wind shown in table 2, the marine climate has a feature of strong wind which provides a favourable condition for reducing moisture of the stored grain. So it is possible to carry out grain storage in barns in coastal areas of Northeast China. Making use of natural wind direction as natural ventilation ensures the grain safely stored in barns and piles in summer.

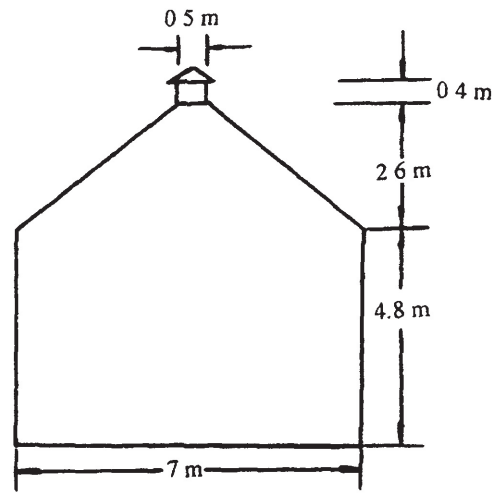

Fig. 1. Modified reinforced barn

Conclusion

In coastal areas, grain can be stored not only in bag piles, but also in modified steel reinforced bins. We can get a conclusion that grain storage should meet with the condition of safe moisture, safe in summer days, low merit factor reduction and no mildew and insect growing up in grain and keeping in the same grain grade. Pile storage suits to large areas, less grain and short-time grain storage while barns can be used for small, large grain amount and long time storage.

The fee for barn storage is less than that for pile storage. The saved fee per ton a year is 28.10 ¥RMB/T. The total saved fee for 6, 000 tons is 168, 600 ¥RMB annually. Reduction of moisture loss in a year is 420 tons (counted according to 0.7%) which costs 460, 000 ¥RMB per year according to present market price and in total, the saved fee reaches 2,148,000 ¥RMB a year

The area spared in bin storage over pile storage. By storing in pile, one ton grain occupies one square meter while bin storage only needs 0.52 square meter. It follows that with 0.48 square meters can be saved, that is to say, Long Jiaying Grain warehouse in Qinhuangdao with a storage capacity of 60, 000 ton grain, can store 115, 000 tons of grain without expanding the storage area if pile storage changes to barn storage. In the meanwhile it can also save 3,232,000 ¥RMB. This is an economical result. If such storage grain methods are popularised, it will get more considerable social benefits.

References

Chen Shitao. 1992. Study of Spending Summer of Grain in outdoor Storage. Grain Storage 21(4) 9 – 12. (In Chinese)

Hu jian, Zhou Jingxing. 1997 Present Situation and Development of Grain Storage Technology with Vertical Silo in Our Ccountry . Journal of Zhenzhou Grain College. 18(2) 24 – 31 (In Chinese)

Liu Deyuan et al. 1997. Studies on Using Large Scale Model Grain Reinforced Bin Journal of Hei Longjiang Cereals and Oils Science and Technology. 31(3) 31 – 32 (In Chinese)

Liu Zhonghe, Ge Wanjun et al. 1997. Test of Natural Ventilation for Bagged Corn Stored in the open Air. Grain Storage. 26(3) 27 – 30 (In Chinese)

Lu Xiaojun et al. 1997. Probe into the Technology of Grian Storage at Ambient Conditions. Cereals and Oils Barn Storage Science and *Technology Communication* 1997. 3. 20 – 21. (In Chinese)

Yu Hongmin et al . 1997. Research a Countermeasures of Comprensive Index of Meteorology on Storage of Grain. Journal of He Longjiang Cereals and Oils Science and Technology. 30(2) 19 – 24 (In Chinses)

Wang Junan 1996. Type Selection of Grain Storehouse Construction. Tianjin Cereals and Oils Science and Technology. 1996.3. 2 – 4 (In Chinses)

Zhao Yuefang. 1992. Safe Storage Test of Wet Grain in Open-air Storage. Grain Storage 21 (3) 38 – 41. (In Chinese)