Design of 24-m span hyperbolic shell slab and its application in the construction of grain depots

Feng Tianmin[1]

Abstract

The 24-m span hyperbolic shell slab is a space thin-wall structure that integrates mathematical model, high-strength steel and high-grade concrete into one body. It is a new-type roof member with slab and truss combined into one piece. It has begun to be used in the construction of storehouses in the grain industry. Practice has proved that this new-type roof member features rational structure and advanced technical and economic indices, and has achieved good results in use

Design of Hyperbolic Shell Slab

Design principle

(1) The length of hyperbolic shell slab (24 meters) is much larger than the width (3 meters) The longitudinal structure is designed according to the ordinary pre-stressed concrete girder member, the curve in cross section is a parabola, and the transverse reinforcement usually only needs to be arranged according to the construction.

(2) The calculation diagram of hyperbolic shell slab roof storehouse is the same as that of the storehouse by using roof truss plus roof boarding as roof, their transverse sections are all calculated according to the bent frame. The hyperbolic shell slab roof conforms to the assumption that it has a cross girder with unlimited rigidity and has reliable hinged connection with walling column head. It is considered that the longitudinal action of connecting hinged beam and trimmer beam can be calculated according to the frame.

(3) The hyperbolic shell slab roof can bear partial horizontal force transmitted by the gable, the gable column head is regarded as an immovable hinged support, and horizontal tension brace shall be provided for the edge shell slab at the slab bottom and gable column head.

Geometrical figure of hyperbolic shell slab

Curved surface equation:

$$Z = f_x \frac{x^2}{a^2} - f_y \frac{y^2}{b^2}$$

Where, taking a = 1485mm, b = 12000mm, f_x = 950mm, f_y = 250mm

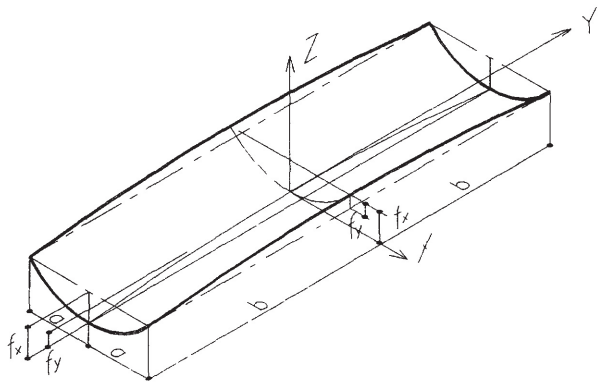

Fig. 1. Geometrical figure of slab

To determine curve surface equation means to select an appropriate two-way curvature. The main straight mother line which passes through the origin of coordinate lies in a rational position in terms of its x-coordinate at the slab end. The pre-stressed reinforcement will be arranged evenly in parallel along the two sides of main straight mother line, making the gravity of pre-stressed reinforcement versus the longitudinal curvilinear axis vary along the parabola, and making it be proportional to the bending moment diagram under the action of evenly distributed load.

The equation of the cross section central line parabola is:

$$Z = f_x \frac{x^2}{a^2}$$

Where, f_x = 950mm, the vertical thickness of slab varies along with the parabola, the rule of variation is:

$$t_x = t_0(1 + \frac{x^2}{a^2}\lambda)$$

Where, λ is an introduced parameter, taking

$$\lambda = \frac{t_a - t_0}{t_0} \qquad \text{taking } t_0 = 70\text{mm},\ t_a = 140\text{mm}$$

[1] Beijing Grain Engineering Design Institute

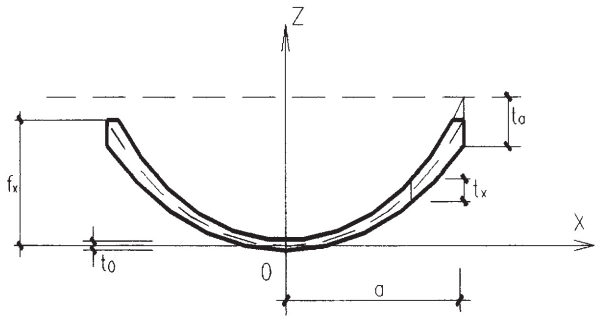

Fig.2. The cross section of the shell slab

The advantage of variation of slab thickness is: making the concrete area of compressed zone enlarged, also being able to improve the longitudinal and transverse rigidity, thus creating the condition for designing a large-span hyperbolic shell slab. The elimination of flange brings about convenience for fabrication, stacking and transportation.

Load and material

The dead weight is 2.33kN/m^2, the live load is 0.5kN/m^2, and considering that it will act as a thermal insulating layer and waterproof layer, it should be added with 1.0kN/m^2.

C40 fine stone concrete is adopted, stones used for making concrete are in a two-stage allocation, i. e. 5 – 13mm is approximately 30%, 13 – 25mm is approximately 70%, medium-coarse yellow sand is adopted, it is strictly forbidden to use additive that will corrode the reinforcement.

Use twisted steel wire with ϕ^{j} 10.75 ($1 \times 3 \times \phi 5$) f_{ptk} = 1570N/mm^2 as pre-stressed reinforcement, and use Class-I reinforcement or cold drawn low-carbon steel wire as reinforcement of longitudinal and transverse construction.

Tension control stress $\sigma_{con} = 0.72 f_{ptk}$, when pre-stressed reinforcement is loosened, the concrete grade reaches $\geqslant 0.75 f_c$, use two beams of oxygen to cut pre-stressed reinforcement alternatively. After the tension is released, the shell slab will automatically arch and eject from the mold.

A Case History of Application of Hyperbolic Shell Slab

Beijing Grain & Feed Depot is situated in Niushan Town of Shunyi County. In the depot, the flat story bin for packed grain adopts 3 × 24-m pre-stressed hyperbolic shell slab of double span and 26-m slab length as the roof, four bins use 160 slabs in total, amounting to 12500 square meters, the project was completed and put into use by 1992

The selection of roof scheme

In the past years, grain system (especially grain storehouse) was always built uniformly as a flat-story bin with a span below 18 meters. Along with the development of reform and opening-up, the demand for adopting economical and convenient new type bin and the demand by construction units for building large span flat-story bin have been growing greater and greater, thus the selection of roof scheme has become a problem of utmost importance.

The usually adopted roof schemes are pre-stressed reinforced concrete roof truss plus large roof boarding, steel roof truss plus large roof boarding, and pre-stressed reinforced concrete folded plate. The above-mentioned structural forms of roof truss plus large boarding all have obvious disadvantages. For instance, the very height of roof truss with 24-m span already reaches 2.5 meters, when the bottom chord of roof truss is 6 meters, the eaves height is nearly 9 meters. The effective utilization ratio of building space is too low. The rigidity of pre-stressed reinforced concrete folded plate itself is poor, and the transport and hoisting are quite difficult. Specialized construction company was required to fabricate, transport and hoist, which results in much higher cost. Compared to these, the hyperbolic shell slab is a more feasible scheme. Through demonstration in many ways, it has the following advantages:

(1) The slab has an artistic shape, self-balance for superimposed load, and good stability. The slab shape is helpful to roof drainage, the slab joint is at the slab ridge, which facilitates waterproofing treatment. Compared to the large roof boarding, the slab joint decreases by third-fifth, and the integrity is also better.

(2) The structural height is small, and the slab bottom height is the very eaves height. Compared to the roof truss plus large roof boarding, the eaves height can lower by more than two meters, thus reducing the height of enclosure walling, so the utilization ratio of space is high.

(3) There is only one member – hyperbolic shell slab, and the slab space rigidity is great. The roof does not require to be provided with steel brace, thus saving the quantity of steel to be used.

(4) The covering thickness is enlarged, the average reduced thickness of roof truss plus large roof boarding is 8 – 9 cm concrete, while the actual boarding thickness is only 2.5cm The reduced thickness of pre-stressed hyperbolic slab is 9.3cm while the actual thinnest place of the slab is 7cm, which is helpful to waterproofing and thermal insulation

(5) Force transmission is simple. The hyperbolic shell slab transmits a load directly to the walling or column, while the roof truss plus large roof boarding transmits a load from the boarding to roof truss that transmits the load to the walling or column. The load transmitted to the walling or column by a hyperbolic shell slab is a linear load, while the load transmitted to the walling or

column by the roof truss is a concentrated force. The problem of local bearing must be considered for the walling at roof truss support, thereby the method of work is also different. Moreover, the hyperbolic shell slab can have multi-point connection with the lower bracing structure As counted by two points for each slab end, each six meters of spacing has a four-point connection, while the roof truss has only one point at the end. Therefore the connection of hyperbolic shell slab is more reliable and more effective with respect to earthquake resistance.

(6) The roof truss plus large roof boarding (24-m span) must use concrete bent frame structural system and independent column base, while the hyperbolic shell slab used as roof boarding can use brick-and-reinforced concrete masonry construction and strip foundation. The reason is that the linear load transmitted by the slab makes the walling evenly in force, the bearing area is large, and there is reliable connection between slab and walling. Additional advantageous condition is that the enclosure height of walling is reduced, and the corresponding dead weight of structure is lighter.

(7) According to the current Beijing estimates quota (1992), an analysis and comparison is made for the direct cost of 3×24-m hyperbolic slab The direct cost of one square meter of hyperbolic slab system is lower than that of reinforced concrete roof truss plus large roof boarding by more than 10%, and is lower than that of steel roof truss plus large roof boarding by more than 40%. The direct cost of hyperbolic shell slab is about 102 yuan/m^2, yet without counting the saved cost of the upper structure from foundation due to hyperbolic shell slab.

(8) Hyperbolic shell slab is generally prefabricated on the construction site, and hoisted and assembled on the very place, thus saving a considerable sum of transportation expenses.

Conclusions

Compared to the traditional system of roof truss and beam-slab structure, the hyperbolic shell slab has better economic results and superior structural behavior. After the project was completed and put into use, the relevant leaders and persons in charge of capital construction of various grain depots went to visit it one after another, and they all gave it a full affirmation and praise. In the planned construction projects such as Lishuiqiao Grain Depot, Beijing Grain Center Depot (a World Bank loan project), and Haidian National Grain Reserve Depot, this roof form will be adopted As proved by the actual use in a few years past, the project having adopted the structural design of hyperbolic shell slab is successful, and it can be said that in the construction of grain depots from now on, it has played a demonstrative role to some extent.

It should be pointed out that the hyperbolic shell slab roof structure with slab and truss combined into one piece has many advantages. However, there are some minute problems in the design and construction yet to be further studied and solved. Nevertheless, along with the dissemination and use of pre-stressed hyperbolic shell slab in the construction of storehouses in the grain sector, people's recognition of it will be continuously deepening, and this structural member pre-stressed hyperbolic shell slab and its structural system will surely be improved day by day.

References

Architecture Research Institute of Ministry of Metallurgical Industry, 1973. Hyperbolic shell slab roof (in Chinese). Metallurgical Industry, 1, 26

Ge Lianfu, 1975 Application of pre-stressed hyperbolic shell slab and discussion of some problems thereof. Metallurgical Architecture, 5, 31

Foundamental construction committee of Zhejiang province, 1980 Calculation of 24m×15m prestressed saddle-shaped shell slab. Prestressed building bloch design and cinstruction, published by Architecture Industry Public of China, 178－184.

Fen Lei, 1990. Brief introduction of 27m span saddle-shaped shell slab project at Luhe Flour Mill. Prestress Technology Newsletter, 10, 4.