A hanging steel silo

Wang Rongshuai[1] and Yang Shizhong[2]

Abstract

Steel silo is one of the main grain storage containers. All types of steel silos in use can be styled Placing Steel Silo; it is placed on the supporting bed or foundation Its disadvantages are: (1) steel strength used only about one third because of the buckling of it; (2) the pressure applied to the silo wall by the stored material will be doubled at time of unloading according to the Silo Code. So, more steel and fund are needed for construction. In order to overcome the two disadvantages above mentioned of the Placing Steel Silo, the Hanging Steel Silo was designed. It is hung at its top circumference. In thisl case, less steel and capitals are needed for the construction of the Hanging Steel Silo The National Patent Bureau has awarded the writer a patent right for this design.

Introduction

The steel silo technology has been used for storing granular materials in China since the beginning of 80's, and it attracted many scholars to concentrate their attention in studying on this technology.

It is well known that the steel silo belongs to thin-shell structure, and when the friction of the storage material to the silo wall applies axial compression, it is easy to buckle. The structure design of steel silo is controlled by buckling conditions instead of by strength conditions and its buckling critical compressive stress is very smaller than its strength. On the other hand, axial tension is not to cause buckling, so that the structural design of steel silo is determined by its strength conditions instead of by its buckling conditions

All types of steel silo used now can be styled the placing steel silo that is located at the supporting bed or the silo foundation. The friction of the stored material makes it to be compressed in axial direction. The disadvantages of the placing steel silo are: (1) steel strength used only about one third because of the buckling of it, (2) the pressure applied to the silo wall by the storage material increases one times when unloading according to the silo code. With unloading of the storage material, the dynamic pressure on the silo wall exerted by the storage material changes very much which may result in the buckling of the Hanging Steel Silo. So, more steel and capitals are needed for construction to guarantee the safety of the Placing Steel Silo.

In order to overcome the two disadvantages above mentioned of the Placing Steel Silo, the Hanging Steel Silo was designed.

Model of the Hanging Steel Silo

The sketch drawing of the Hanging Steel Silo is shown in Fig. 1. Main idea is that we manage to make silo wall be hung at its top circumference, is this status in, the storage material friction to the silo shell shall make it axial tensile. As we know, axial tension will not cause the silo shell buckling, so, we can reasonably make use of the strength of steel to design the silo wall. And in order to hang the silo wall, a compression support bin with radial steel cantilever trusses for hanging silo wall and openings for grain flowing in and out are set up in the center of the hanging steel silo. This bin can be used as the pressure reduction pipe to decrease the dynamic actions as far as possible when unloading the storage materials. And this bin can also be used for the ventilation of the whole silo.

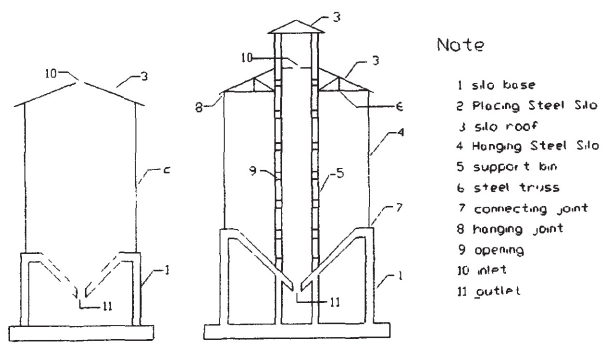

Fig. 1. Diagram of the placing steel silo and the hanging steel silo.

In a word, the Hanging Steel Silo can overcome the two disadvantages of the Placing Steel Silo mentioned above Therefore, less steel and capitals are needed for the construction of the Hanging Steel Silo.

[1]Zhengzhou Grain Science Research & Design Institute under the Ministry of Domestic Trade, 153 Nanyang Road, Zhengzhou 450053, China

[2]Foreign Capital Management Office, Ministry of Internal Trade, 45 Fuxingmennei St, Beijing, China

The basic structural elements

Main structural elements are a compression support bin, radial steel cantilever trusses set on the bin for hanging of the steel silo and a tensile steel silo.

These structure elements are described respectively as follows:

The compression support bin

On the compression support bin are set the radial steel cantilever trusses to hang the steel silo, so, it is the pillar strength of the whole silo. On the compression support bin, openings are also designed in all directions and various heights. Through these openings, the storage material flows inside or outside the compression support bin to unload or load the steel silo.

In consideration of too low strength of brick and stone, concrete structure will be used for the compression support bin. The diameter of the compression support bin, D1, will be $D_0/4 - D_0/3$, and will not be smaller than 2m, in which, D_0 is the diameter of the steel silo The compression support bin is supported by the foundation.

The compression support bin can be used as the pressure (storage material to steel silo wall) reduction pipe and for the ventilation of the whole silo.

The radial steel cantilever trusses set on the compression support bin

The radial steel cantilever trusses are set upon the upper part of the compression support bin to hang the Hanging Steel Silo and support the root of the Hanging Steel Silo. They are rooted in the upper and lower ring beams, which are inlaid in the near-top part of the compression support bin.

The tensile steel silo

Steel plates welding or other fitting method can be used for the construction of the Hanging Steel Silo wall However, the LIPP Patent Silo wall should not be used for the Hanging Steel Silo wall, as its rolling construction joints are not favorable to endure tension action. The top circumference of the Hanging Steel Silo is hanging under the radial steel cantilever trusses set on the compression bin; the bottom of the Hanging Steel Silo is connected with the base bed. The diameter and heights of the Hanging Steel Silo will be determined according to the application conditions and the conditions of the foundation bed

Work Principle

Loading, unloading operations

When loading, the storage material goes into the compression support bin from the top conveyor of the Hanging Steel Silo, and its level rises gradually When the material level is higher than the bottom openings on the compression bin, the material flows into the Hanging Steel Silo through the bottom openings on the compression support bin After a period of time, the material level in the bin rises again, the above procedure repeats time and again from the lower openings on the bin to the upper openings successively until the silo becomes full of grain last through the highest openings on the bin. Of course, the bin also becomes full of grain.

When unloading, as the storage material flows out of the silo hopper, the material level drops gradually. When it is lower than the highest openings on the bin, the material in the silo flows into the bin. After a period of time, the material level in the bin drops again, above process repeats time and again from the upper openings on the bin to the lower openings successively, until the silo becomes empty last through the lowest openings on the bin, finally the bin also becomes empty

Structure mechanical status

When the silo and bin are empty, the silo is subjected to the lateral wind load and transfers it to the Trusses at the silo top circumference and the base bed at the silo bottom.

When the silo and bin are filled with the storage material, the material lateral pressure produces circumferential tensile stress in the silo wall, but it produces circumferential compressive stress in the bin wall. The storage material vertical friction produces vertical tension in the silo wall, but to the bin wall, produces vertical compression. That is to say, the Hanging Steel Silo is tensile in both directions and the concrete bin is compressive in both directions. According to the strength theory, these stress statuses are respectively favorable to the steel silo and the concrete bin.

Furthermore, when unloading, as the material flows through the bin, its dynamic effects on the Hanging Steel Silo will be near zero. This condition is also favorable to the steel silo.

Construction Details

The steel silo hanging on the cantilever trusses

As shown in Fig. 2, a tensile ring of angle iron is set up at the outer joints of the cantilever trusses. The steel silo is connected with a wing of the angle iron ring by means of high strength bolts.

The steel silo connecting with the base bed at its bottom

As shown in Fig. 2, a band plate ring is welded with the embedded parts in the base bed. The steel silo bottom is bolted to the band plate ring and the bolt hole on the steel silo will be ellipsoidal to allow the steel silo wall move up and down freely.

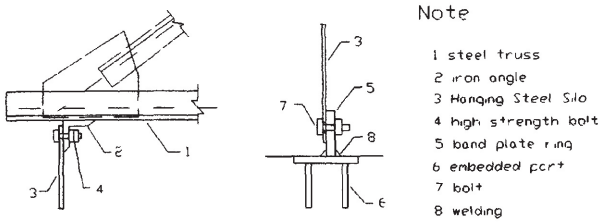

Fig.2. Structure details of the top and the bottom end of the hanging steel silo

Procedure in Construction

- Construction of the base bed.
- Slip fore or prefabricated construction of the compression support bin.
- Assembly of jack lift frame.
- Lift the cantilever trusses and the steel silo wall every time lifts a certain height, assembles a circle plate of the steel silo wall, which is pre-assembled on the ground.
- After assembly and lift of the whole steel silo finished, manages to anchor the cantilever trusses to the compression support bin at the exact position
- Lay out the roof plates of the steel silo.

Conclusion

The Hanging Steel Silo has advantages of structural properties, as it is tensile in both direction and the compression bin is compressive in both directions. So we can reasonably make use of the mechanical properties of steel and concrete materials, and the storage material unloading dynamic effects to the hanging Steel Silo will be near zero. Also the compression support bin with many openings can be used for ventilation, therefore, the hanging Steel Silo is not only less expensive, but also safer. However the construction period of the Hanging Steel Silo may be a little longer.

References

M. L. Reimbert and A. M. Reimbert, 1976. Silo Theory and Practice, Trans Tech Publications, Germany, 239p.

Sun Xunfang etc. 1979. Material Mechanics (in Chinese), People's Education Press, Beijing, 442p.

Zhou Jiajun etc , 1988 Design Code for Reinforced Concrete Silo (GBJ77 - 85) (in Chinese). China Jihua Press, Beijing, 52p.