Intransit disinfestation of bulk and bagged commodities: a new approach to safety and efficacy

C R Watson[1], N Pruthi[2], D Bureau[3], C Macdonald[4], and J Roca[5]

Abstract

The concept of using the time that goods are intransit while travelling from point of origin to point of destination has for many years been recognised as both an opportunity for insect infestation to develop, and for insect extermination to be carried out Methyl Bromide, (which has been the most rapid acting and widely used fumigant for many years) is being phased out for environmental reasons under the United Nations Montreal Protocol, and therefore there is an increased requirement for viable alternative strategies

Phosphine has been available for many years but requires much more time than methyl bromide to be effective, and is similarly toxic to humans Phosphine is generally recognised as relatively easy to use in many agricultural situations However in bulk or bagged shipments it is usually difficult to use both effectively and safely Standards and procedures in respect of these treatments vary extremely widely around the world

This paper describes how a number of interested organisations located in different parts of the world have recognised the problems involved As a result a unique collaborative project has evolved These organisations have considered and taken account of the many diverse and varied conditions They have co-ordinated the requirements and options, with the objective of researching and establishing procedures that can be used widely to ensure effective insect control and safe working conditions for treatments in bagged and bulk shipments

[1] IGROX Ltd, White Hall, Worlingworth, Woodbridge, Suffolk IP13 7HW

[2] PEST CONTROL (M WALSHE), 503 Embassy Centre, Nariman Point, Bombay 400 021 India

[3] ADALIA PREVENTATIVE SERVICES LTD, 8685 Lafrenal Street, St Leonard, Quebec, Canada H1P 2B6

[4] PESTMASTER, PO Box 3625, Cresta, South Africa

[5] ROCA DEFISAN SL, Partida de Vera 29, 46129 Alboraya (Valenci) Spain

Introduction

With increasing demands throughout the world for improved standards of Food Safety the requirement to deliver food free of infestation has also increased However demands have also increased that require not only freedom from infestation, but also zero or very low residues, no health risks, and no increase in costs

For many years the treatment of bagged and bulk cargoes travelling between countries has been carried out in a traditional manner that had evolved to meet the needs of the seller There was a need to change this to meet the new demands, but no obvious or easy solution

Traditional Treatments

The seller or shipper when loading the goods carries out a treatment to the goods to try to ensure insects will not be found during loading (especially if the representative of the receiver is present) and also that insects are not found when the vessel arrives at the discharge port

These treatments may be carried out with residual insecticide, methyl bromide fumigant, or phosphine fumigant

The disadvantages of insecticides are that they only work when insects emerge from the grain and come into contact with residues of the insecticide that have been sprayed on to the grain This means that some immature stages of the insect may still be alive on arrival at the discharge port because they have not emerged from within the grain and come into contact with the insecticide

Methyl Bromide and phosphine fumigants which act in a gaseous state can both provide a very quick kill of adult insects. However to kill all stages of the insect (adult, larvae, pupae, egg) it is absolutely essential to achieve an even distribution of gas through the cargo and to maintain a lethal concentration throughout the cargo for a long enough period once this even distribution has been achieved

This is where most fumigations in ships fail They fail because either the distribution of the gas is poor, or where the distribution is good enough the gas is not retained in all areas for long enough (Leesch, et al , 1987) This information has been available for many years but is largely

ignored by exporters because to carry out a fully effective fumigation is perceived to be more expensive Therefore as the exporters requirements are only to get the cargo accepted at the discharge port often the fumigation treatment is arranged so that this is the key objective For example aluminium phosphide applied to the surface or top few meters only of a bulk of grain will result in a very thorough fumigation of that grain but very little fumigation of the grain in the lower part of the bulk Figs 1 and 2, reproduced from earlier literature demonstrate the unevenness of gas distribution but in terms of achieving the exporters objectives this type of fumigation may be generally acceptable

What does the receiver or end user of the cargo want

The receiver does not want to receive live infestation at any time but especially from imported cargoes This is because imported cargoes may contain species or strains that are not present in the receiving country For example with resistance to phosphine becoming more widespread in some Asian and African countries, it is especially important that these strains are not allowed to enter countries where resistance is not present In addition the food processor will not accept commodities that show any signs of live infestation in many countries In the UK for example most food production companies including flour millers, have a zero insect tolerance policy

Is it possible to achieve a fully effective intransit fumigation of goods

In 1994 a group of independent fumigation companies located in different parts of the world drew up a protocol to work together to address these issues The objective was also to take into account the many variables which existed world-wide but the common factors were

(1) A ships hold can be an excellent fumigation chamber if it can be made gastight
(2) A lot of research had been carried out by well respected government laboratories throughout the world on the movement and distribution of fumigants and on the concentrations necessary to eradicate a wide range of pests at different temperatures Most of the research is ignored by exporters when specifying fumigation
(3) In some countries systems which provided an excellent distribution of the fumigant were already available (e g Degesch re-circulation J System in Europe and USA) while in other countries (e g India) they were not
(4) Control of the fumigation once it leaves the load port is largely ignored The responsibility for the completion of the fumigation and the ventilation at the discharge port is generally left to the master of the vessel
(5) Safety-In some countries (e g Canada) The safety recommendations and regulations set out by the United Nations International Maritime Organisation (UNIMO 1996) are strictly adhered to In others such as Spain they are often ignored

The objective of the group was therefore to provide the receiver or the end user with the opportunity to choose to specify that he required his cargo to be treated so that all live infestation was eradicated, with little or no detectable residues remaining and using methods procedures which ensured safety to the crew of the vessel and to all those involved in discharging the vessel

Development Work

It was decided that various methods of fumigation were needed to address various situations and therefore the following schedule of development work has been followed

(1) Verification of the efficacy of the Degesch re-circulation J System method
(2) Development of a passive system using pre-fitted perforated pipes for use in ships and ports where it is not possible to use a powered re-circulation system
(3) Effective deep probing

Verification of the Efficacy of the Degesch re-circulation J System method

Two field trials were completed during 1996

(A) *Intransit Fumigation using the Degesch J System to comply with the Mozambique Import Requirements of Commodities from countries where Larger Grain Borer (Prostephanus truncatus) is present (Rogerson and Winspear*, 1996)

It was decided to monitor the gas levels in a vessel that was to transport Kenyan Maize as Food Aid and being fumigated with phosphine It was sailing from Mombassa in Kenya to Beira in Mozambique with the cargo destined for onward trans-shipment to Malawi The fumigation was being carried out to control the Larger Grain Borer (Prostephanus truncatus) as part of a quarantine programme to prevent this pest establishing itself in the countries (such as Malawi and Zambia) using the east African ports (Refer to Mozambique Plant Quarantine Requirements of January 1996) It is known that if the Larger Grain Borer establishes itself widely it will have a very detrimental effect on the maize crop in this region of Africa

It was suspected that methods of treatment where the aluminium phosphide was placed on the surface or only probed a few metres into the hold were ineffective, and also that some of the vessels used for the shipments were not very gas tight

The fumigation monitoring team consisted of John Rogerson of Igrox Ltd from the UK and Peter Winspear from Pestmaster in the Republic of South Africa

The ship, the M V Vitagrain, was built in Valencia,

Spain in the mid 1970's She has seven holds with 2 Sampson post natural ventilators (20 metres high) and 2 fan assisted ventilators on each hold, though most of the fans were inoperative The chain linked McGregor hatches on each hold were opened and closed by winch cables also used on the derricks

・Fumigation

The ship had been fitted with plastic re-circulation pipes prior to loading by Pestmaster of South Africa A ring of perforated pipe of 150mm in diameter was placed against the sides at the bottom of each hold This was connected with a T to a non perforated pipe which was tied to the manway ladders and terminated just under the manway hatch at the top of the hold ladder

When the fumigation team arrived at the ship five of the holds were fully loaded Sample lines were inserted into each hold using a vacuum sampler (Pneumac, UK) and 18mm I D plastic rods

The holds had capacities of	***Gas Sample Line Positions***
1 = 3963	*Each hold had 5 sample lines*
2 = 4796	
3 = 5295	– Headspace
4 = 3391	– 2 Metre Depth
5 = 5095	– 8 Metre Depth
6 = 5703	– 10 Metre Depth
7 = 4255m^3	– 14 Metre Depth (Bottom)

Holds 2, 3, 4, 5, and 6 were fully loaded and contained between 3000 and 4000 metric tonne of Kenyan white maize each Holds 1 and 7 were slack, with 1 being half full and 7 two thirds full

The J System fans were installed at the top of the manholes and were wired to run from the inspection light points

The vessel was loaded by hand by tipping bags of maize into the hold and a space was left between the hatch combing and the deck beams and the top ballast tank walls If the vessel had been loaded with a mechanical loader the grain thrower would have filled this space

The fumigators would normally have climbed the Sampson posts and covered each ventilator with a polythene sheet but on this vessel it was too dangerous The team could therefore only close the flaps inside the ventilator shafts and cover the lower ventilators which had holes in, with polythene

When working in the holds installing the search lines there were many places where it was possible to see light indicating very small gaps and holes in the hatches Also there were very small holes in the deck houses where the plates had rusted right through One of the inlets on the natural ventilator door was broken and held with a rope This was covered with glue and polythene as were all other accessible potential leakage points

Each hold was treated with round tablets of aluminium phosphide (3gm) placed on the surface of the cargo at the rate of 1 5grams of Hydrogen Phosphide per cubic meter The total cargo loaded was 22996 tonne of white maize The hatches were closed and sealed and the manholes were closed and sealed As each hold was fumigated the fans were turned on and left running continuously for five days

・Sampling

Gas samples were taken with an Agridox meter fitted with a Citycell phosphine detector As the upper limit of the Agridox meter is 2000 ppm (2 78gm/m^3) readings above this limit were read with Drager model 25/a (high level) tubes. At low levels Drager 0 1a (low level) tubes were used Working areas of the ship were checked frequently for leakage of phosphine None was found in the main accommodation, engine room and fore peak However the three deck houses had substantial levels during the first few hours of the fumigation These areas were designated out of bounds and not used by the crew during the voyage

After the ship arrived in Beira gas readings were taken with Inspectors from the Mozambique Plant Quarantine services and the final readings recorded The holds were then opened and left overnight with the fans running for ventilation Readings the next day confirmed safe levels in the grain below 0 3ppm The fans were then removed The holds were then sampled for insects by the use of vacuum sampling (Probe a vac) at various depths No live infestation was found although there was an extremely high level of dead insects (mainly Cryptolestes spp)

・Programme

1 The vessel loaded in Mombassa from 18/1/96 to 29/1/96
2 The fumigant was applied in Mombassa on 29/1/96
3 The vessel sailed on 29/1/96
4 The vessel arrived off Beira on 3/2/96
5 The vessel berthed in Beira on 9/2/96
6 The vessel commended discharge in Beira on 10/2/96

・Findings

Concentrations recorded during the fumigation are shown in Tables 1 – 7 below

It can be seen from Tables 1, 3, 5 and 7 that holds 1, 3, 5, and 7 lost a lot of gas from the surface This gas leakage was through the hatches and through the holes in the deck house, and on the deck plates

Table 1. Concentration of phosphine (gms/m^3) at various depths recorded during fumigation Hold 1, volume 3963m^3, Dose 15kg ALP

Time / hours	Bottom 14m	Mid low 10m	Mid high 8m	Top 2m	Head space
6 5	1 21	1 27	1 27	1 28	0 04
28 5	0 5	0 52	0 53	0 0222	0 0092
31	0 53	0 54	0 46	0 0195	0 0113
41	0 48	0 44	0 49	0 01267	0 00974
89	0 46	0 47	0 46	0 097	0 00978
109 25	0 41	0 44	0 45	0 0195	0 0014
133 25	0 28	0 29	0 31	0 0111	0 069
180	0 0375	0 04	0 0389	0 0083	0 0042
205	0 0334	0 0347	0 0375	0 0169	0 0028
229 5	0 0292	0 0378	0 0292	0 0056	0 0014
244 5	0 0306	0 0292	0 0306	0 0042	0 0042

Table 2. Concentration of phosphine (gms/m^3) at various depths recorded during fumigation Hold 2, volume 4796m^3, Dose 18kg ALP

Time / hours	Bottom 14m	Mid low 10m	Mid high 8m	Top 2m	Head space
6 5	1 56	1 57	1 6	1 9	NO
28 5	1 52	2	2 78	2 65	
31	1 52	1 98	2 08	0 97	L
41	1 44	1	1 099	0 88	L
89	0 97	0 3	0 104	0 1	N
109 25	0 06	0 023	0 03	0 03	E
133 25	0 0139	0 0209	0 00421	0 00221	
180	0 0097	0 00281	0 00281	0 00281	
205	0 0042	0 00282	0 00282	0 00282	
229 5	0 0042	0 0042	0 00282	0 00282	
244 5	0 0056	0 0056	0 00282	0 004	

Table 3. Concentration of phosphine (gms/m^3) at various depths recorded during fumigation Hold 3, volume 5295m^3, Dose 20kg ALP

Time / hours	Bottom 14m	Mid low 10m	Mid high 8m	Top 2m	Head space
6 5	BLOCKED	1 27	1 28	1 31	1 31
28 5	BLOCKED	0 68	0 69	0 67	0 67
31	BLOCKED	0 6	0 6	0 37	0 37
41	BLOCKED	1 48	1	0 38	0 38
89	BLOCKED	0 65	0 65	0 09	0 09
109 25	BLOCKED	0 49	0 51	0 13	0 13
133 25	BLOCKED	0 24	0 08	0 07	0 073
180	BLOCKED	0 22	0 15	0 09	0 065
205	BLOCKED	0 09	0 09	0 05	0 041
229 5	BLOCKED	0 05	0 05	0 029	0 0027
224 5	BLOCKED	0 03	0 03	0 032	0 0029

Table 4. Concentration of phosphine (gms/m^3) at various depths recorded during fumigation Hold 4, volume 3391m^3; Dose 13kg ALP

Time / hours	Bottom 14m	Mid low 10m	Mid high 8m	Top 2m	Head space
6 5	0 03	2 78	0 1	1 19	0 35
28 5	1 86	1 99	1 87	0 34	0 34
31	1 83	1 78	1 81	0 36	0 28
41	1 06	1 08	1 12	0 21	0 2
89	1	0 95	0 27	0 08	0 08
109 25	0 73	0 04	0 56	0 17	0 14
133 25	0 54	0 32	0 53	0 0347	0 0347
180	0 27	0 0139	0 25	0 032	0 032
205	0 23	0 01392	0 24	0 0306	0 0306
229 5	0 2	0 0209	0 201	0 09	0 029
244 5	0 21	0 0222	0 198	0 032	0 032

Table 5. Concentration of phosphine (gms/m^3) at various depths recorded during fumigation Hold 5, volume 5095m^3, Dose 18kg ALP

Time / hours	Bottom 14m	Mid low 10m	Mid high 8m	Top 2m	Head space
15 5	0 04	0 04	0 03	0 17	0 03
37 5	0 35	0 36	0 36	0 36	0 26
39 75	0 21	0 26	0 27	0 26	0 22
49 75	0 21	0 21	0 21	0 2	0 25
65 75	0 16	0 1529	0 16	0 16	0 05
86	0 11	0 15	0 15	0 13	0 04
109 75	0 08	0 07	0 07	0 07	0 0209
156	0 04	0 03	0 03	0 0236	0 0167
181	0 0215	0 0238	0 21	0 0222	0 0139
229	0 0209	0 0195	0 0195	0 0195	0 0125

Table 6. Concentration of phosphine (gms/m^3) at various depths recorded during fumigation Hold· 6, volume 5703m^3, Dose 22kg ALP

Time / hours	Bottom 14m	Mid low 10m	Mid high 8m	Top 2m	Head space
15 5	2 78	2 78	2 78	2 78	2 5
37 5	2 76	2 73	2 71	2 95	3 34
39 75	2 66	2 63	2 54	2 78	3 2
49 75	2	2 04	2	2 05	2 02
65 75	1 55	1 52	1 48	1 55	1 62
86	0 75	0 75	0 78	0 77	0 7
109 75	0 28	0 28	0 27	0 28	0 28
156	0 23	0 19	0 04	0 23	0 22
181	0 17	0 17	0 03	0 19	0 11
229	0 08	0 08	0 03	0 01	0 0028

Table 7. Concentration of phosphine (gms/m^3) at various depths recorded during fumigation Hold: 7, volume 4255m^3, Dose· 17kg ALP

Time / hours	Bottom 14m	Mid low 10m	Mid high 8m	Top 2m	Head space
15 5	0 92	0 92	0 9	0 9	1 42
37 5	0 166	0 16	0 15	0 08	2 78
39 75	0 172	0 14	0 13	0 07	2 78
49 75	0 0556	0 05	0 04	0 04	0 17
65 75	0 0056	0 01	0 01	0	0 0542
86	0 0334	0 02	0 013	0 011	0 0698
109 75	0 00141	0 0028	0 0028	0 0028	0 0691
156	0 00071	0 03	0 00041	0 0014	0 0028
181	0 007	0 00031	0 0042	0 0011	0 0014
229	0 0003	0 00032	0 00012	0 00062	0 00062

Table 8. Concentration-Time Products (gh/m^3) achieved at depths of different Holds with 'Mean' and 'Standard deviation' Cargo temperature was 30℃ (+ or −2℃)

POSITION	HOLD 1	HOLD 2	HOLD 3	HOLD 4	HOLD 5	HOLD 6	HOLD 7
14M	78 5	127 6	BLOCK	155 6	19 83	198 45	21 9
10M	79 6	100	125 9	152 7	20 36	196 45	22 3
8M	81 3	106 3	104 7	128 4	27 07	183 19	21
TOP 2M	20 9	95 6	54 3	39 7	22 02	201 1	19 4
HEADSPACE	1 89	NO LINE	53	28 5	12 21	199 3	81 2
MEAN	52 42	107 4	84 5	100 58	20 3	195 7	33 16
+ SD	38 1	14 16	36 63	62 67	5 36	7 2	26 87

SD = Standard deviation (measure of degree f deviation from average)

·Conclusions

1 The amount of gas loss differed significantly in each hold

2 The distribution throughout the bulk in each hold was relatively even

3 The low concentrations achieved in the head space indicate that leakage occurred through the hatch covers, decks etc If the re-circulation system had not been used then it is likely that gas would have leaked out of the hatch covers etc before it had the opportunity to penetrate into the cargo

4 Even the lowest $C \times T$ recorded in the cargo of 19 4 is considerably higher than necessary to eradicate all life stages of Larger Grain Borer at these temperatures Even if ventilation had commenced after 120 hours (the minimum time to comply with Mozambique requirements) the $C \times T$ would have been satisfactory in each area of each hold

5 Due to the variability of gas tightness demonstrated on this vessel we can conclude that it would be unwise to reduce the specification in any respect regarding application rate, exposure period or distribution system However as the vessel was so poor we can have confidence from these results that even under the poorest conditions that if this procedure is followed total eradication will be achieved

6 The maize was moved to Malawi following discharge and it is understood that some remained in store for many weeks or months Reports indicate that no infestation developed from within the maize during storage which is what would be expected when total eradication of infestation is achieved by a fully efficient fumigation

(B) *Fumigation Intransit and Subsequent Inspections by Cuban Authorities on a cargo of rice from S E Asia*

A request was received to arrange for a cargo of bagged rice which had been loaded in S E Asia and destined for Cuba to be fumigated The vessel which had already set sail, was re-directed to Durban R S A The request for fumigation was that it must be fully guaranteed with no live infestation of any type of insect at any stage of the life cycle on arrival in Havana

It was decided to use the Degesch J System which because

of the way the rice had been stowed could be fitted after loading Pestmaster of South Africa met the vessel in Durban and carried out the fumigation as specified and directed by Igrox Ltd in the UK It was decided to use this opportunity to test the efficacy of the J System under these most difficult conditions

·Method

The J System was fitted to the M V ASIAN PROGRESS as the enclosed diagram Fig 4 There was sufficient access down the side of the hold and below the tween deck to allow the Pestmaster technicians to fit the pipes in each hold Gas sample lines were also fitted in 3 places in each hold

Aluminium phosphide in retrievable sachets was placed on top of the cargo and the fans switched on The holds and all access points were sealed and tests carried out for leakage When all requirements as per IMO Recommendations on the Safe Use of Pesticides in Ships had been met the vessel was allowed to sail on 27th February 1996 with strict instructions to ensure all seals remained intact and the fans switched on until arrival in Cuba

·Findings – havana, cuba – 27th march 1996

The inspection of the fumigation commenced on board the vessel at approximately 10 30 a m with representatives of Cuba Plant Quarantine, Igrox Ltd and the shipper in attendance

The fans were switched off (No 2 was already not running as it stopped 10 days after the vessel left Durban) and then the access manholes to each hold were opened in turn The 3 gas sampling lines positioned in each hold were retrieved The lines were labelled as B (Bottom), M (Middle), H (near to the Top) Samples were drawn using the Agridox Phosphine Meter Low levels of approximately 1ppm were recorded on all lines in the first hold checked (No 5) Further samples were then drawn using a Draeger pump and Phosphine Tube 0 1/a This confirmed that the concentrations were between approximately 0 7 and 1 00 ppm

The remaining four holds were tested in a similar way and all lines indicated concentrations between 0 6 and 1 00 ppm

On completion of these measurements the ventilators were opened and the ships ventilation system was switched on Phosphine was immediately detected by smell on the deck The hatch covers were opened and the polythene sheets used to seal the holds were removed and ventilation continued Gas concentration checks carried out indicated it was safe to work in the holds and initial checks were made by Cuba P Q inspectors in each hold to ensure all fumigation ducts and fans had been located correctly, which was confirmed Ducts to the lower holds could be clearly seen

The sachets containing the aluminium phosphide residues were collected and taken away for disposal by Plant Quarantine

Further gas measuring checks with the Draeger equipment were carried out in the air space below the surface and zero or only traces of Phosphine were recorded The Clearance Certificate was issued at 16 00

·Observations

1 The P Q inspectors were very keen to see all aspects of the fumigation system and obviously knew what they were talking about and what to look for This especially applied to Mr Jacinto Dominguez Luis, the head of the port inspectors and to Mr Omar Amaro Rodriguez They wanted to see that the fumigation ducts actually went to the bottom of each hold and that they were all connected correctly, and that the holds had been sealed effectively
2 During the detailed examination of the cargo on Thursday 28th widespread evidence of infestation was found with dead insects (all *Tribolium spp*) on almost all the bags
3 Despite the fact that no ventilation was carried out during the voyage from Durban there was no evidence of moisture damage
4 Samples were taken by the P Q Inspectors for incubation No evidence of live infestation was reported
5 Discharge commenced on from 31st March and continued for 3 weeks All cargo remaining on the vessel was inspected each day by the P Q inspectors

·Conclusions

(a) The concentrations of gas found to be present in Havana although low, indicate that it is very likely that the total concentration time product (CTP) that had been achieved during the fumigation at the sample points had been well in excess of that needed to effect total eradication
(b) During the 29 day fumigation the gas would have slowly leaked out, broken down, and been sorbed by the commodity Due to the re-circulation system being used the low levels of gas remaining were found to be evenly distributed, and it is likely that any residues that remain from the phosphine gas in the product will be very low
(c) As the system could not be fully fitted as normal in Durban because the cargo was already loaded, did the gas reach all parts of the cargo? Because of the way the cargo was stowed with gaps between the bags at regular intervals, and the way the fumigation ducts were positioned in the lower holds, it was concluded that the gas would almost certainly have reached everywhere evenly This was apparent because despite thorough and continuous checking of the cargo throughout the 3 week discharge, including incubation of samples, no live insects were found
(d) Ventilation in future could commence 10 days or so after application of fumigant The re-circulation system correctly fitted, will result in high CTP's in 10 days in all parts of the cargo These CTP's will result in fully

efficient eradication of any infestation, and by commencing ventilation after a ten day fumigation period, it will be likely to eliminate any possibility of condensation damage which could occur in certain types of weather conditions

Development of a passive system (Fig. 5)

In India where no powered re-circulation systems (e g Degesch J System) is available, a request was received from buyers to provide a fumigation system which had as far as possible similar benefits to the re-circulation system, which ensured good distribution and that all residues were removed

This led IMFO members Pest Control M Walshe of Bombay with assistance from Igrox Ltd of the U K to develop a system specifically for this requirement

The system used was an adaptation of the passive system developed by Bob Davis of the USDA in the USA in the 1980's

Two fumigations took place in western India at the ports of Bedi and Navlakhi Both Ports are anchorage ports

The vessels which loaded the wheat in bulk were both Bulk Carriers and Tween Deckers

The following procedure was used

Fumigation Used Aluminium Phosphide in pre-packed sachets in chains of 50's & 10's Each sachet weighed 34 grams The rate of application was 3 grams of Phosphine per tonne

100 mm diameter reinforced P V C pipes were purchased and were then drilled with holes of about 5mm The drilling was done as evenly as possible Care was taken to ensure that the reinforcements were not damaged The pipes chosen were rigid and reinforced so that they would not be crushed by either the wheat, or when they were passed through the manholes and laid in the lower holds

To assist adequate dispersion and penetration of gas in the tween decks perforated pipes were inserted into the grain cargo vertically

A cotton string was run end to end into the pipes laid in the lower holds The concept was that the sachets would be lowered in from the top and the string would pull the sachets into the pipes to their full depth

As a further experiment weights of 2 5 & 1 lbs were specially made, to be used to pull the sachets deep into the pipes Tests were run to see how deep the weights would go The results showed that this was likely to work satisfactorily

After completion of loading, when tests were carried out to determine whether it was possible to pull the strings laid through the pipes, this system proved unreliable However the alternative plan of using the weights was used successfully

For treatment in the Tween Decks, sachet chains of 10' sachets were let down using the 1 0lb weights into the pipes which were laid vertically in the grain

For the lower holds sachet chains of 50' sachets were lowered using the 2 5lbs weights Also chains were secured by ropes so that they would be easily retrievable on arrival at discharge port

Fumigation was carried out as per I M O procedures regarding safe working practices The Masters of the vessels were given comprehensive sets of paperwork giving all details pertaining to type of fumigant, safety recommendations, first aid, ventilation/discharge instructions, use of gas monitoring equipment etc, together with all required safety equipment and training of crew in its use

The vessels sailed for Turkey where they were met on arrival by IMFO agents All residues were satisfactorily removed and tests throughout discharge showed no evidence of any live infestation anywhere in the cargo

The Vessels used for these tests were

M V Oscar Jupiter fumigated at Bedi on 9-1-1996

Discharged at Turkish Port on 24-1-1996

M V Andreas V fumigated at Navlakhi on 9-2-1996

Discharged at Turkish Port on 26-2-1996

The conclusion reached by Pest Control M Walshe & Igrox Ltd was that this method though relatively labour intensive can provide a satisfactory option (where the journey time is at least 10 days) for a thorough fumigation of bulk or bagged cargoes, when it is required that residues must be removed and where it is not possible to use a powered re-circulation system

Deep probe

The deep probing method was developed by Denis Bureau and his team at Adalia Ltd in Canada

Several factors were taken into consideration during development of this method

1 The Canadian Government's requirements with regard to efficacy and guaranteed results that must be met for issuance of a phyto-sanitary certificate
2 The constraints with respect to certain parameters that control the reaction, such as the temperature of the grain, water and air, as well as the time of exposure related to the duration of the trip
3 Different studies on phosphine diffusion throughout a mass of grain
4 Recommendations on intransit fumigation contained in the (FGIS) guide

Description of The Method

•System Components Figure 6

Platform and probe pipe with pneumatic or mechanical propulsion

Probe 2 types of probe are available for fumigation

The first is aluminium, 2 5 inches in diameter

(approximately 62 mm), for very deep fumigant application without a dust retainer It can also be connected to a re-circulation system

The second is plastic, 4 inches in diameter, (approximately 100 mm) and has been specifically designed for maritime fumigation with re-circulation It can also be used in dust retainer application (long sleeve or sachet chain of 10 metres) when dust free fumigation is required

Both probes have a special head manufactured by ADALIA (patent pending) to maximise performance

The platform and vacuum system enables the probe to penetrate very deeply It can also be used with mechanical force. The system with the 2 5 inch diameter aluminium probe can apply the fumigant to a depth of 25 metres The platform and vacuum system are used to insert the probe to the desired depth, then the fumigant is gradually released as the probe travels upward Dust retainers cannot be used with this type of application

The probe can also be connected to a re-circulation system for faster, residue free fumigation (Fig 6), in this case the fumigant is put in dust retainers on top of the grain

For silos, warehouses and ships less than 20 metres deep, the long sleeve or sachet chain can be used It is 10 metres long, and is introduced with the alternative 4 inch plastic probe

Suitable sleeve or sachet dust retainers are currently being developed and will be available shortly

For very high volumes of over 20,000 metric tonnes, such as large silos and ships, the 4 inch probes connected to re-circulation system are likely to prove to be most efficient method to use Several 4 inch probes are inserted into the grain with the system, then they are connected to a re-circulation system with hoses The fumigant is placed on top of the grain

·New Compounds such as the Horn Generator and Eco-fume

With the arrival of these new fumigant production technologies and the deep probing system, the combined benefits will be a major asset for food protection The combined system diffuses the fumigant through the grain very rapidly regardless of the grain temperature

The Deep Probing technology enables the fumigant to be uniformly distributed throughout the grain mass and thereby reduces the time of penetration and equalisation of the gas within the grain Such efficacious product distribution increases the efficiency and speed of the fumigation process The advantage the technology offers in that it can be used at any time When an infestation is identified in a cargo during loading, the Deep Probing method can be used with excellent results

·Results

Numerous cargoes have been treated using the Deep Probing method since the early 1990's The first vessel treated was the M V ALEKSANDER ABERG, when it was in the Atlantic Ocean off Canada taking a cargo of wheat to Russia The outside temperature was 10℃ and the temperature of the grain was 5℃ The grain had been identified as being infested by the Canadian Grain Commission The Deep Probing technique was used to solve the problem, making it possible to deliver the cargo to Russia insect-free

Conclusion

The Deep Probing method, developed to deal with the infestation by insects of grain shipped from Canadian ports, has many advantages and development work continues so that it can be used elsewhere in the world

Safety

The United Nations International Maritime Organisation sets out clear recommendations for safety in 'Recommendations on the Safe Use of Pesticides on Ships Revised 1996' Many fumigation companies ignore these rules for reasons of economy Even in 1998 several vessels have arrived at UK and other ports around the world with no gas masks or fumigant detection equipment on board This practice still appears to be widespread The fumigator has saved money by not supplying the safety equipment, probably because he is under pressure from the exporters to keep the price as low as possible In this situation who is liable if crew members are killed – is it the fumigator, the exporter, or the receiver? The answer is that probably all three will have some responsibility depending on the contract between them All this risk can so easily be removed if the following points are adhered to

1 Clear documented instructions are provided to the Master
2 Sufficient supplies of the correct safety equipment are placed on board
3 Ship owners instruct their masters to refuse to sail unless requirements of UNIMO are adhered to
4 An IMFO member is appointed to be responsible for the fumigations

Control of efficacy and safety

If on arrival at the discharge port the vessel is met by a correctly trained and briefed fumigation company then both efficacy and safety aspects can be controlled

Fumigant levels can be checked, the grain inspected, fumigant and fumigant residues removed and the receiver can be certain he has an insect and residue free cargo delivered with no risk regarding safety

This concept has clear advantages not only to the receiver but also to the ship owner and his master and crew, and all other parties involved in the movement and storage of the cargo

Future

Through the IMFO Group network this concept of safe, reliable, efficient intransit fumigation is being taken up by receivers when they become aware of the tremendous advantages it can provide The actual cost of the fumigation charge may be slightly higher but the benefits to the receiver far outweigh the extra cost Some of the more enlightened traders and exporters can also see the advantages and opportunities to 'add value' to their sales

With the phasing out of methyl bromide, the likely increased use of phosphine and the continuing pressure on food standards throughout the world the group believe that the scientific but practical approach they are taking to these situations will continue to attract interest throughout the world

References

Redlinger, L M , Leesch, J G , Davis, R , Zettler, J L , Gillenwater, H B and Zehner, J M (1982) Intransit ship-board fumigation of wheat on a tanker J Econ Entomol 71, 1147 – 1152

Leesch, J G , David, R , Zettler, J L , Sukkestad, D R , Zehner, J M and Redlinger, L M (1986) Use of perforated tubing to distribute phosphine during the intransit fumigation of wheat J Econ Entomol 79, 1583 – 1589

Anon (1996) Recommendations for the Safe Use of Pesticides in Ships International Maritime Organisation, London ISBN 92 – 801 – 1426 – 3, P 31

Rogerson, J T , and Winspear, P (1996) Intransit fumigation using the Degesch J System to comply with Mozambique Import Requirements of commodities from countries where LSB is present Personal communication

Annex

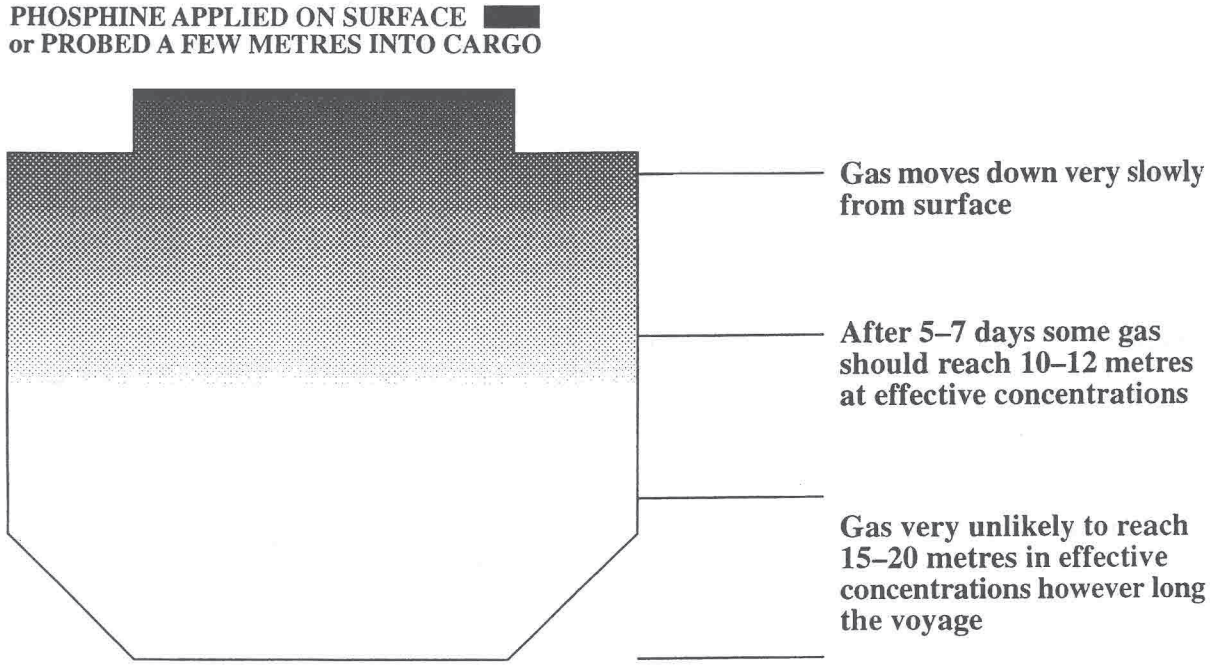

Fig. 1. Traditional fumigation of cargo ships hold using phosphine.

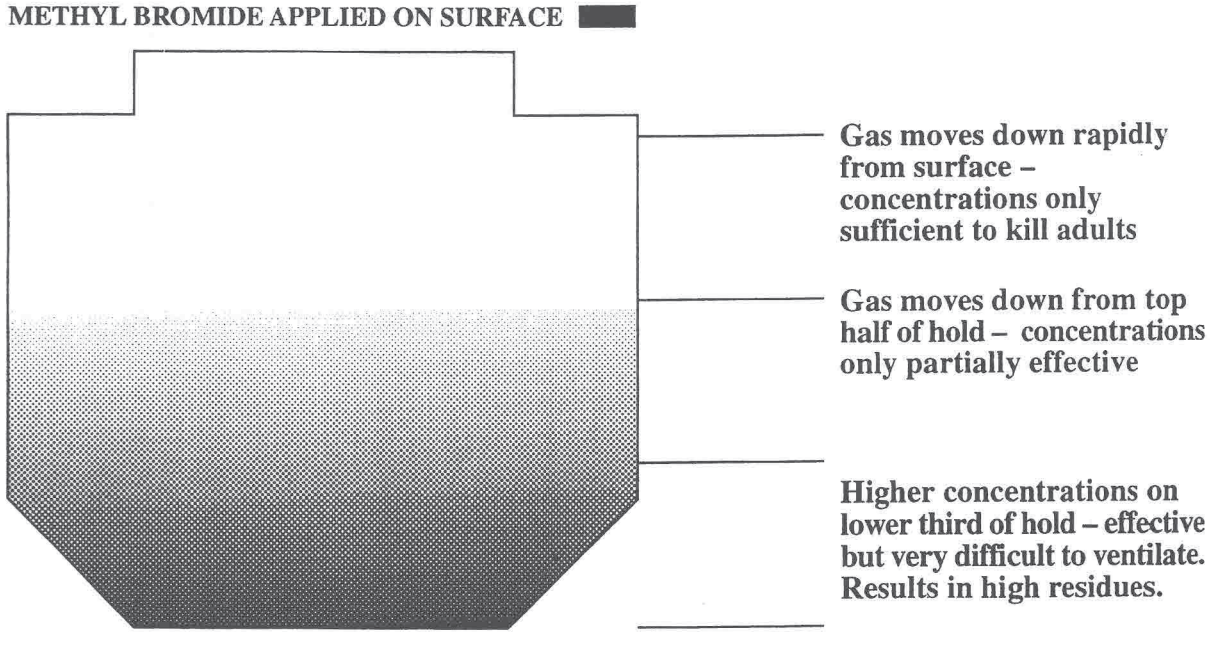

Fig. 2. Traditional fumigation of cargo in ships hold using methyl bromide.

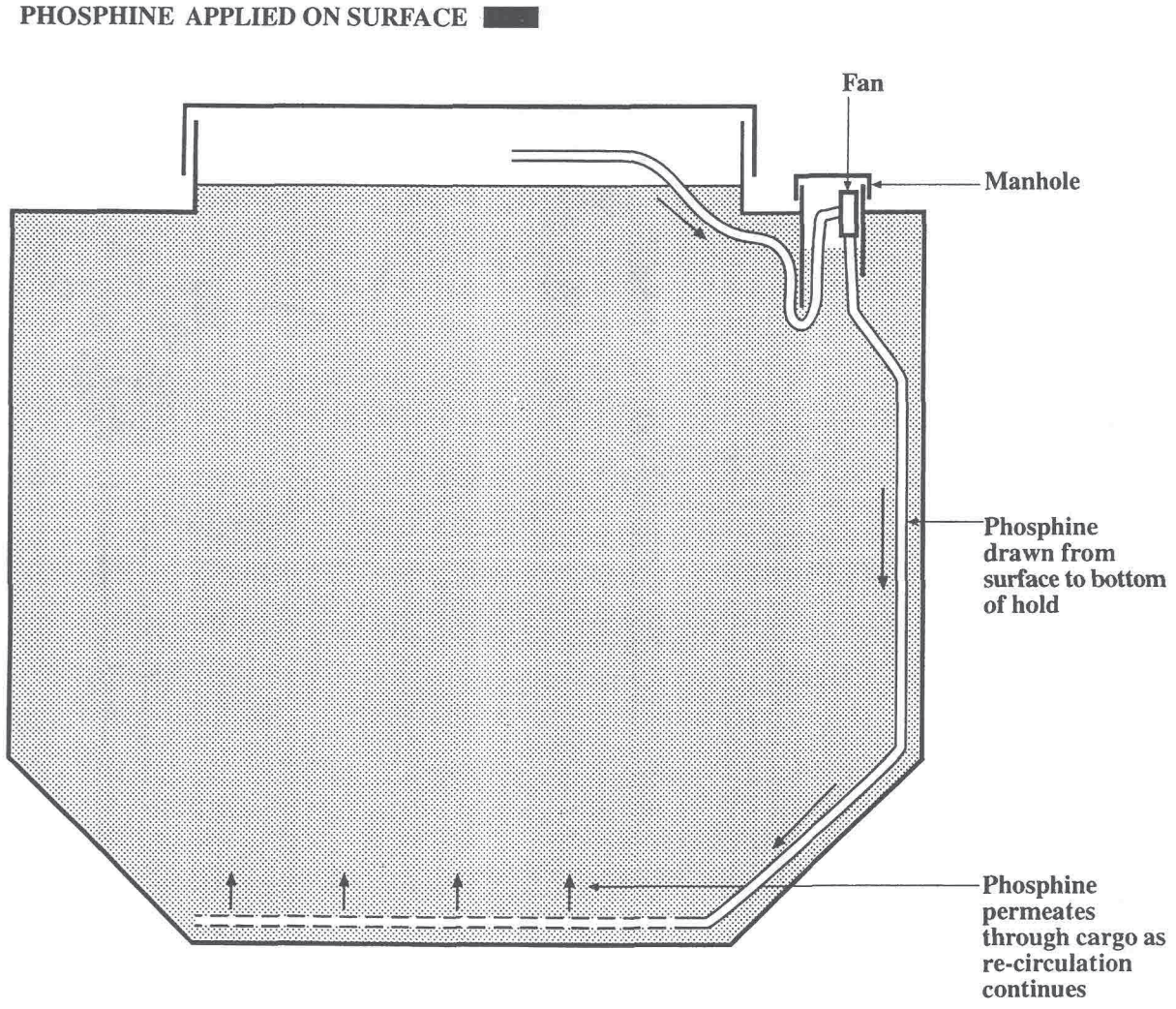

Fig. 3. Fumigation of cargo in ships hold using phosphine and the J. system.

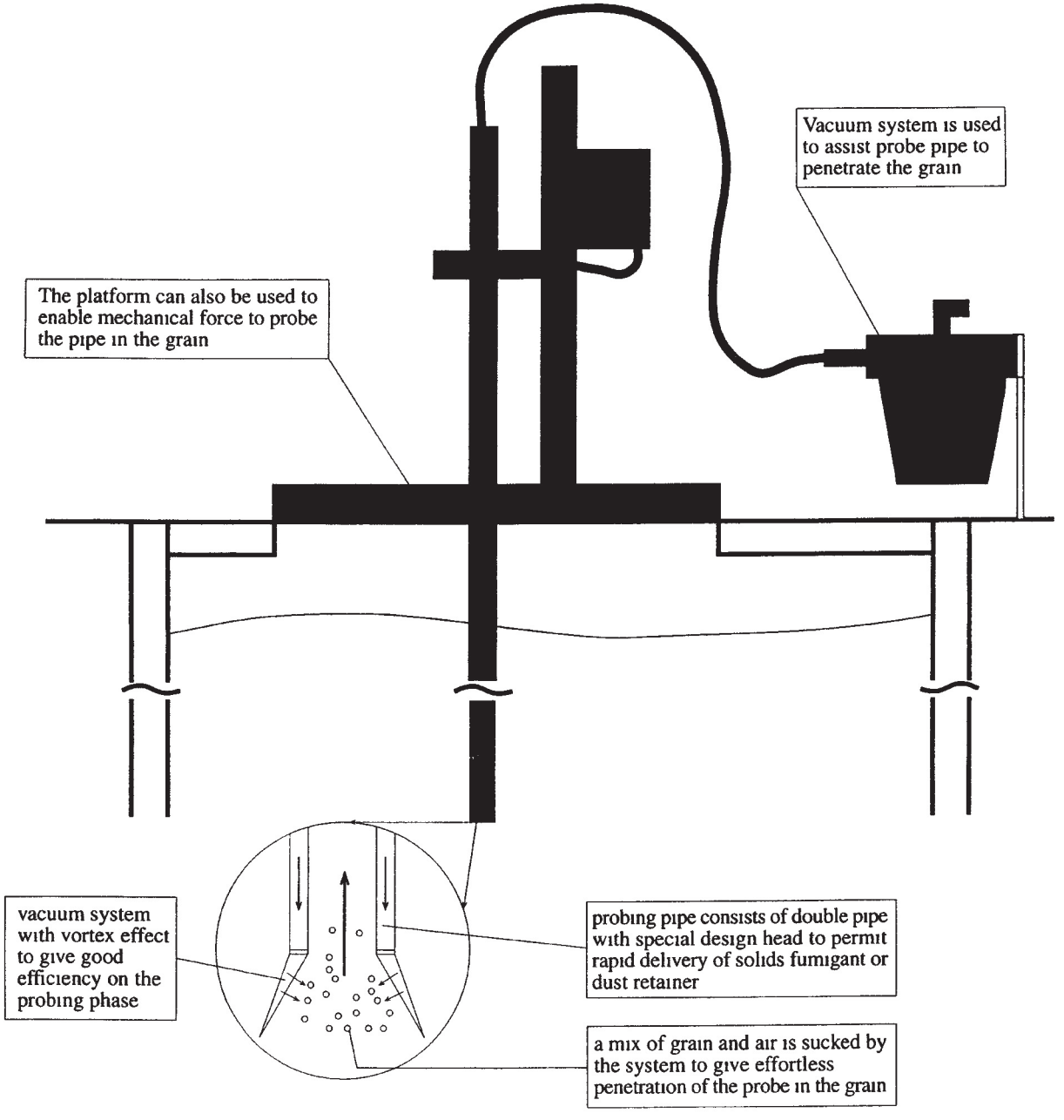

Fig. 4. Fumigation using deep probing system

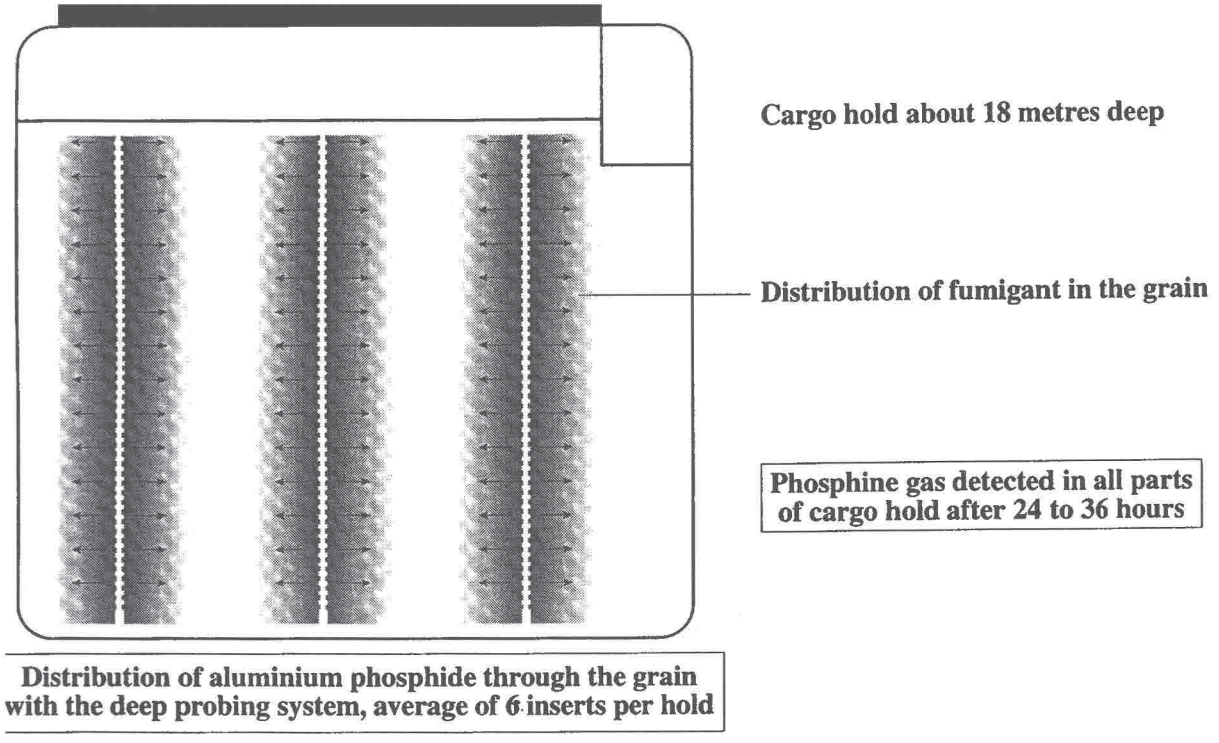

Fig. 5. Deep probing method-passive system.

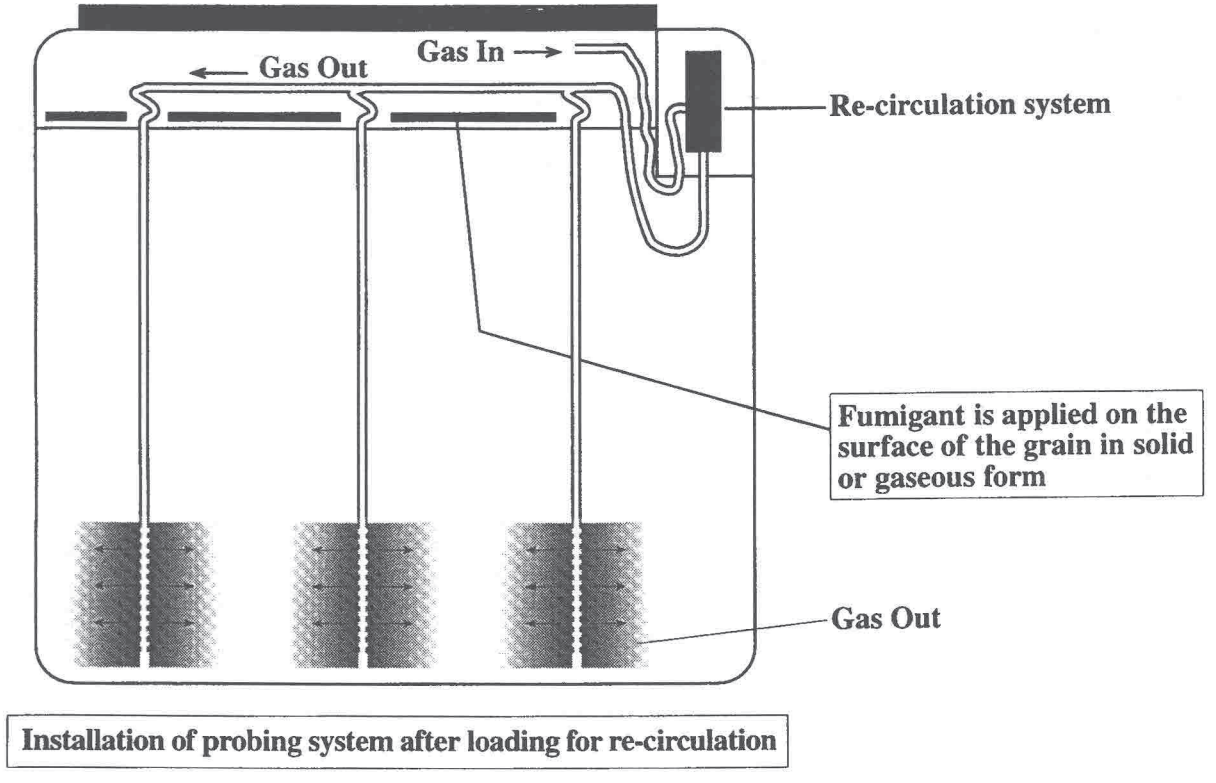

Fig. 6. Recirculation system.

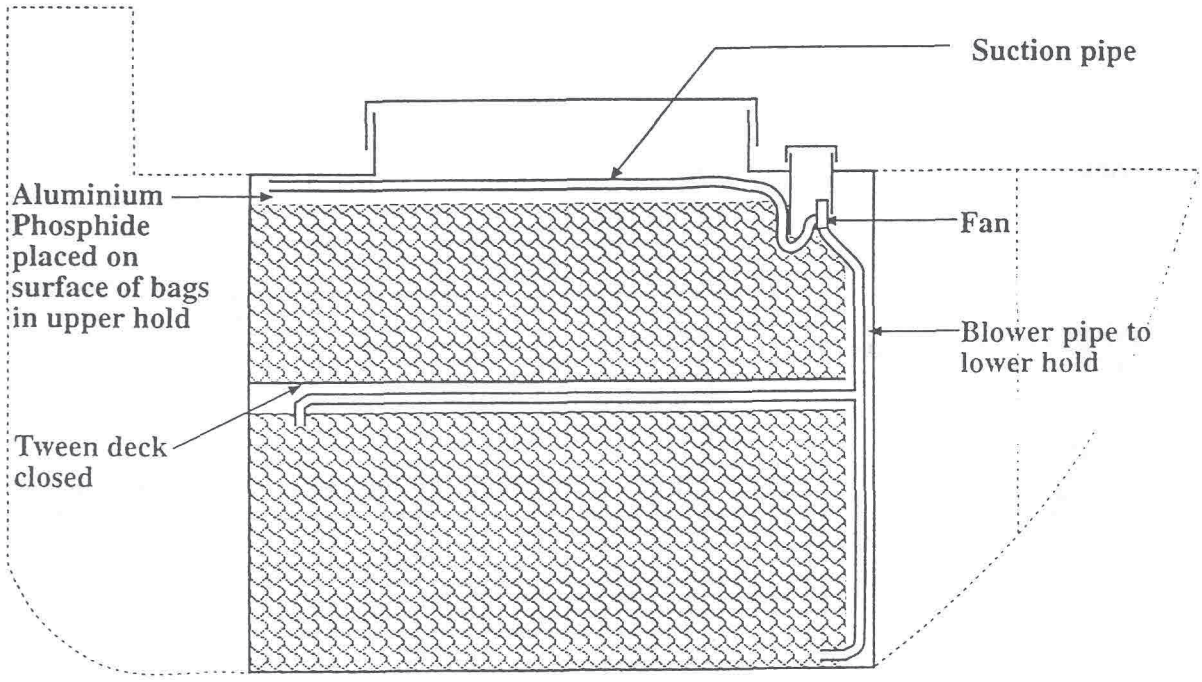

Fig. 7. M. V. Asain Progress-Installation of J system in loaded bagged cargo.
The Hydrogen Phosphide gas (Phosphine) is generated at the surface and then the fan pushes the gas and air mixture into the lower hold. The tween decks are closed but are never gas/air tight and therefore the gas and air mixture must recirculate between the holds. As the hatches are made air/gas tight and the fumigant is almost the same density as air, the currents of air created in the holds rapidly ensure phosphine gas will reach all parts of the cargo.

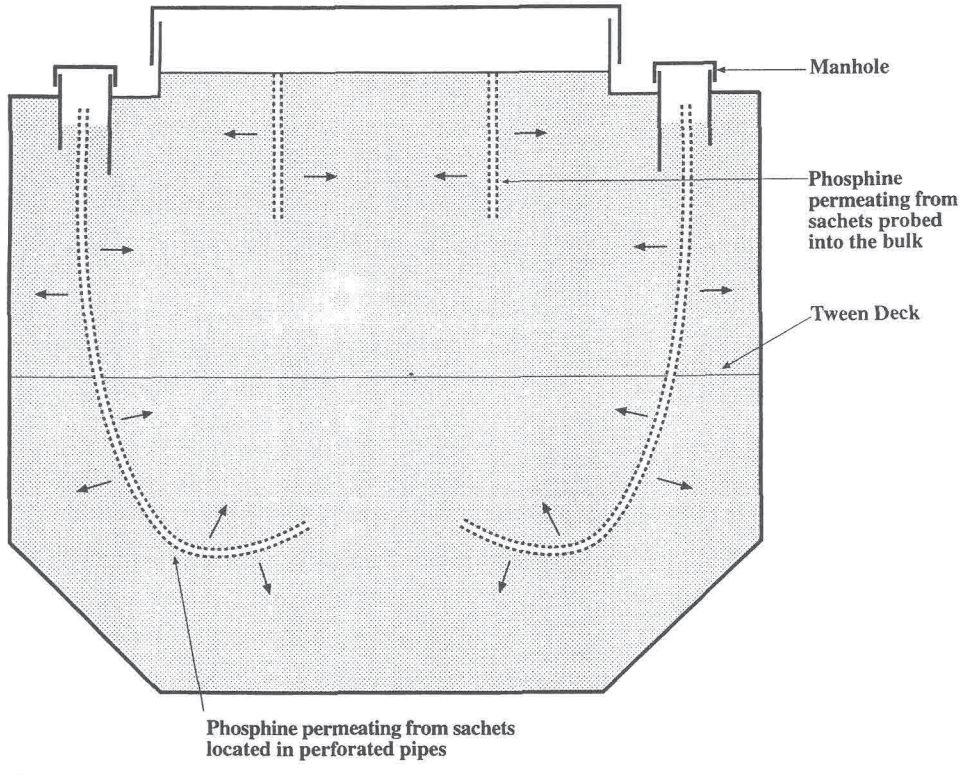

Fig. 8. Fumigation of cargo in bulk carriers/tween deckers ship holds with phosphine using a passive system.