A trial of a phosphine generator for use in grain fumigation

Yuan Chongqing[1], and Liu Tanjin[1]

Abstract

Model CTYW-A phosphine fumigator is an equipment adopting circulating fumigation The fumigator, together with aeration pipes laid at the bottom of the bin forms a gas circulating system Phosphine is generated from the fumigator in a quantitative manner at regular time by using aluminum phosphide tablets and then circulated through the system to facilitate homogeneous distribution It can expedite the distribution of phosphine in treated grain mass, so as to obtain a complete kill of infested pests It can also improve the working condition and lighten the labor intensity of fumigators

Introduction

In order to improve the effectiveness of disinfestation and avoid the fumigant's slow volatility, uneven distribution, weak permeability and poor effectiveness of disinfestation and fumigation operators' long time exposure to harmful gas that exist in current conventional AlP disinfestation, the Grain Machinery Factory of Chenzhou City and us jointly developed a CTYW-A fumigator, which had been used experimentally in Guiyang City and Sichuan District of Chenzhou City A satisfactory effectiveness of disinfestation had been achieved

Experimentals

Structure and working principle of the fumigator

A fumigator is mainly composed of a reaction flask, a safety valve, an application apparatus, a speed control device, a fan, an airway, an electric motor, a puddle mixer and a body frame (Fig 1)

Main technical functions were Application capacity was 3 – 4kg (AlP tablet)/h, and maximum application amount was 15kg (per fumigator each time) Fan with an air quantity of 900 – 1000m^3/h was used, and wind pressure was 1000 – 1100Pa A motor of 1 25kW was used with power supply of 380V

In a closely sealed-up bin, aluminum phosphide that was hydrolyzed at regular time in a quantitative manner by a fumigator produced phosphine gas The phosphine gas (consistently controlled below the flammable intensity) was sent into the bin by a fan through the gas circulating system and distributed evenly in the bin so as to make the phosphine gas in it reach the necessary density to kill insect pests within a short period

Bin conditions

We chose No 024 bin in Renyi Grain Station, Guiyang City and No 101 bin of the provincial warehouse storage in Xifengdu, Suxian District for experiment The conditions of the two bins and the grains stored therein were set forth in Table 1 and Table 2

Ascensional and exhaust ventilation fans were used in the above two bins to lower the temperatures Bamboo-cage wind tubes were fixed at the bottom of the bins with a flow pass way ratio of 1 5 The wind tubes in No 024 bin were laid in a '非' shape with 4 air intakes, and the tubes' diameter were 0 25m The wind tubes in No 101 bin were laid in the shape of '—' with six air intakes, each tube being 0 25m in diameter

Procedures

Make prior-to-fumigation preparations as done for conventional fumigation Firstly, use polyvinyl chloride films with a thickness of 0 14 mm and sealing belts to closely seal up the doors and windows of the bin Secondly, turn over the grain mass so as to improve its air permeability Thirdly, fix up the fumigator Use three soft plastic tubes as airways, two of which were 5 meters long, one end of them was connected to the gas outlets of the fumigator, closely sealed and firmly fixed The other end was connected to the air intakes of the bin Connect one end of the third plastic tube to the air intake of the fumigator, and put the other end into the bin through its wall or window Leaving the mouth of this end around 0 5 – 0 8m away from the surface of the grain so as to prevent any grain from entering the tube Open the safety valve and add around 100 kg water it reached the standard water level Switch on the fumigator and check whether there was any leakage of gas from the reaction flask, the fan and the airways or whether the rotation of the fan is normal When everything was in order, insecticidecan be put into the

[1] Chenzhou Municipal Grain Bureau of Hunan Province, People's Republic of China Post Code 423000

fumigator and fumigation can be started

On March 23 and April 20, 1995, we did experiment with two fumigators in two bins 9kg of aluminum phosphide were put into use in No 024 bin of Renyi county and 22 5 kg (including the aluminum phosphide used in the space of the bin) in No 101 bin of Xifengdu The fumigator in the former bin was kept working for 3 hours and in the latter bin 7 5 hours After all the above aluminum phosphide was put into the fumigators, the fumigators were kept working for another 20 minutes When each time the circulating fumigation had been conducted for an hour, the fumigator stayed switched off for 3 hours Two rounds of circulating fumigation were conducted Thereafter, the fumigators were removed and the bins were sealed off for another 7 days

Results and Discussions

Effectiveness of disinfestation

After checking the two bins, we found that all the injurious insects therein were killed, including the *Cryptolestes pusillus* that are difficult to kill by conventional way 4 months later, the two bins were rechecked and only 1 – 2 *Rhizopertha dominica* were occasionally found in one or two parts of the bins No insects were found in any other parts of the bins

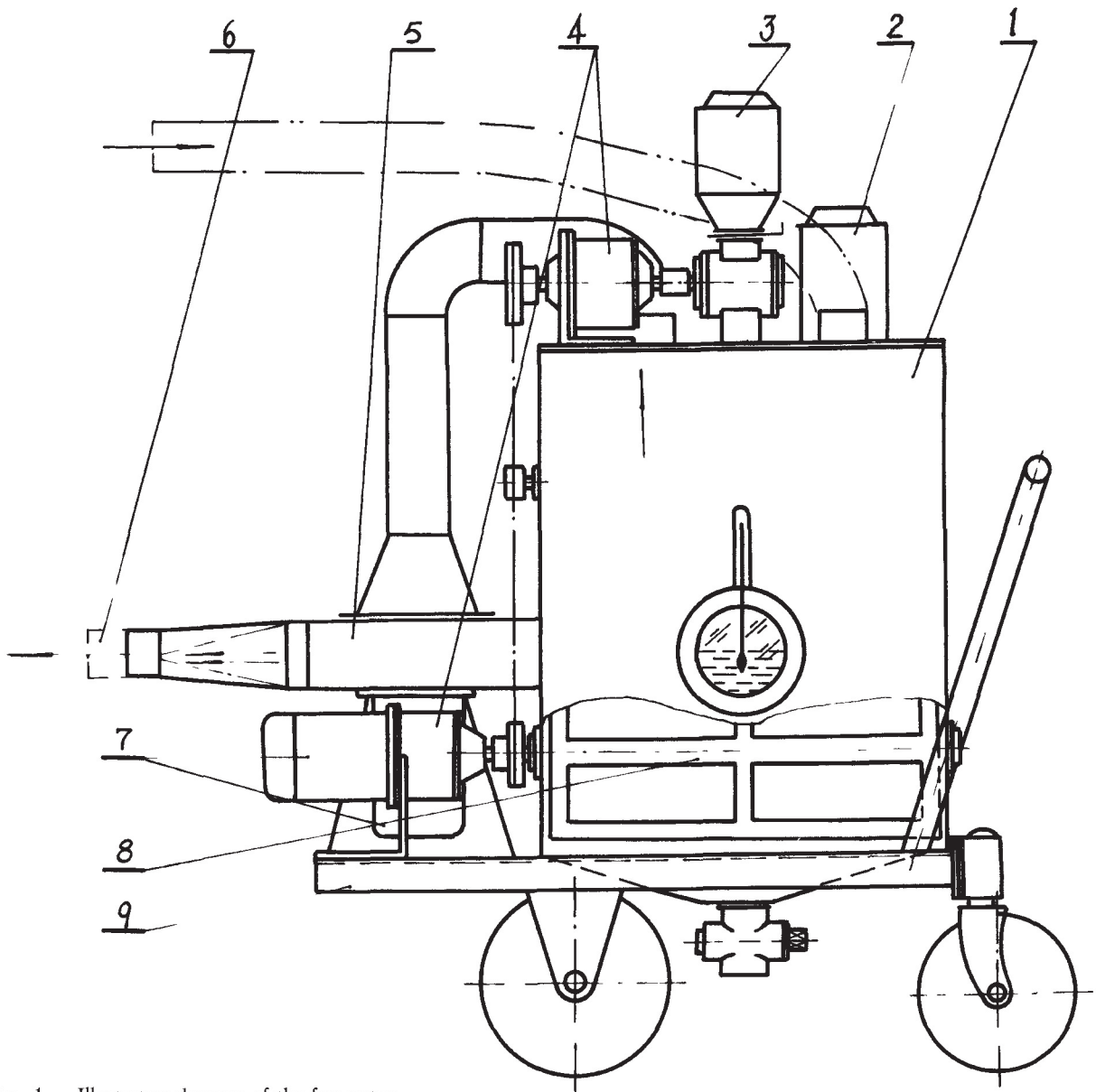

Fig. 1. Illustrative diagram of the fumigator
1 Reaction tank, 2 Safety valve, 3 Dispensing apparatus, 4 Speed adjuster, 5 Fan, 6 Airway, 7 Electric motor, 8 Puddle mixer, 9 Body frame

Table 1. Conditions of the grains in the bins

Bin No	Bin type	Bin Volume(ton)	Grains	Grain Amount(ton)	Height(m)	Time of loading
024	vault	750	late rice	680	4	Nov 1994
101	vault	1,500	early rice	1,490	4 3	Aug 1992

Table 2. Temperature, moisture content and injurious insect intensity of the grains in the bins

Bin No	Temperature (℃)	Temperature of Grains (℃)			Moisture Content (%)	Insect density (no/kg)	Type of pests
		Upper layer	Middle layer	Lower layer			
024	23	23	19	18	14	25	14 *Sitophilus zeamais* Motschulsky, 6 *Cryptolestes pusillus* Schonherr, 2 *Tribolium castaneum* Herbst, 40 *Rhizopertha dominica* Fabricius, 15 *Cryptolestes pusillus* Schonherr, and 10 *Sitophilus zeamais* Motschulsky
101	23	21	20	29	12 5	65	

Safe and reliable operation of the fumigator

If the intensity of phosphine gas in the air reaches 26g/m^3, the phosphine gas will burn automatically In order to avoid any explosion or heat accumulation, in developing the fumigator, we chose to use a fan with an air quantity of 1000m^3/hour and a wind pressure of 1000 – 1100Pa in the fumigator and a reasonable dispensing speed – 70g (of aluminum phosphide)/min According to this standard, 21g of phosphine gas was produced per minute in the reaction flask and 16m^3 of mixed gas (composed of air and phosphine gas, but mainly phosphine gas) went into the reaction flask per minute Thus the phosphine gas in the reaction flask was far below the flammable intensity Meanwhile, the heat produced in the reaction flask went into the bins together with the mixed gas It has been proven with times of our experimentation that if the dispensing speed does not exceed the designed limitation, fumigation is safe The temperature of the water in the reaction flask will go from 19 – 21℃ to 40 – 45℃ after the fumigation was completed, with the maximum temperature never exceeding 500℃

General discussions

Adopting a fumigator to kill insects can overcome such shortcomings as slow hydrolyzing and uneven distribution of insecticide that may arise from conventional fumigation By using a fumigator, aluminum phosphide reacts directly with water in a quantitative manner at regular time with the help of the fumigator and the phosphine gas so produced soon reaches to the intensity needed to kill insects Thanks to the even distribution of the phosphine gas by way of circulation, insects are killed completely, thus repeated fumigation is reduced and insecticide and expenses are saved The intensity of phosphine gas in every part of the two bins was tested for 2 hours after insecticide being dispensed See Table 3

Table 3. Distribution of Phosphine gas in the bins(mg/L)

Testing Time	Bin No	Head Space	Phosphine Concentration in Grain Mass		
			Upper	Middle	Lower
After application	024	0 3	0 5	1 2	1 8
	101	0 4	0 6	1 4	1 9
2 Hours after	024	1 5	1 5	1 5	1 5
Application	101	1 6	1 6	1 6	1 6

Adopting a fumigator to kill insects can reduce labor intensity and save manpower with simple and safe operation It can improve working conditions and reduce labor intensity for fumigating operators Normally only 2 operators are needed for operating the fumigator and the operation is conducted outside the bin Operators may have the possibility to be exposed to poisonous gas only when they open the insecticide bottles Compared with the conventional fumigation, adopting a fumigator to kill insects can reduce 4 – 6 fumigating operators and shorten 90% of time when fumigating operators have to be exposed to poisonous gas

The equipment applied in fumigation is simple and economical for its easy and safe operation Its manufacture cost is around 6,600 yuan (RMB) Carbon dioxide was not needed in operation and thus the equipment had a very wide

adaptability It can make full use of and give full scope to mechanical wind tubes

However, improvement is still needed through further studies As limited by the present conditions, the minimum density of insecticide to effectively kill insects is to be further studied for determination

References

Zhang, Lailin 1994 Research on insect-killing by circulating fumigation in a silo bin, Grains Storage 4, 7–11 (In Chinese)

Technical directive rules for grain storage by means of mechanical ventilation (On a Trial Basis) promulgated by the Grain Distribution Bureau of the Ministry of Commerce 1991 (In Chinese)