Esbiol 200 with Turbocide GOLD – A new safe and efficient system for insct control

Dr Andrew J. Adams, Gilles Serre, Dr Robert N Taylo[1]

Abstract

The Turbocide GOLD (Gas Operated Liquid Dispenser) sytstem been developed by AgrEvo for the safe, effective treatment of large buildings, such as warehouses, and has been evaluated, extensively, throughout the USA and Europe, in particular. Liquid carbon dioxide is mixed with a liquid active ingredient (ai) concentrate in a patented metering and mixing device and the resulting mixture is dispensed through a tubing network to a series of spray nozzles. As the mixture is emetted from the nozzles the carbon dioxide changes to its geseous phase which produces a cloud of finely atomized (vnd approx 5μm) active ingredient. Field trial results from commercial-scale permisess are presented which demonstrate that, for example, a volume of 100, 000m^3 can be treated in 6 minutes, with the spray being evenly distributed in less than 20 minutes, and remaining airborne for 2 – 6 hours. Biological data demonstrate the effecacy oft synergised pyrethrins and Esbiol 200 (20% w/w s-bioallethrin) againsst a range of stored product pests, files, mosquitoes and cockroaches Turbocide GOLD offers numerous advantageous features, incldng the elimiation of operator exposure (no manual mixing, no filling of containers, treatment is carried remotely) and container residue or disposal problems (containers arte easy to handle, returnable and refillable, sealed and tamper indicated). The active materials are nonpersistent, so there are no residues, while the treatment, itself, is precise and repeatable Once the system is installed, labor requirements are very low and treatments can be performed overnight, for example, or at other times when the area is unoccupied, so that closedown time for insecaticide application is minimized

Introduction

The Turbocide GOLD (Gas Operated Liquid Dispenser) system has been developed by AgrEvo for the safe, effective treatment of large buildings, such as warehouses, and has been evaluated extensively throughout the USA and Europe. Liquid carbon dioxide is mixed with a liquid active ingredient (ai) concentrate in a patented metering and mixing device, and the resulting mixture is dispensed through a tubing network to a series of spray nozzles Results are given here on the biological and physical properties of ESBIOL 200 (S-bioallethrin 20 % w/w) applied using an installed Turbocide GOLD system.

[1]Hoechst Schering AgrEvo GmbH Werk Hoechst, Tor Sud, K 607 D-65926 Frankfurt am Main, Germany

Materials and Methods – Biological Evaluation

Site

All trials were conducted in an aircraft hangar of dimensions: 52 m × 28 m × 12 m; Total volume: 17,500 m^3 The building was constructed from asbestos sheeting supported on a steel framework. Metal concertina doors ran across one end of the building. While not providing an airtight seal, these doors were fitted with a brush strip at the base, reducing air movements into and out of the building Several doors provided additional points of entry. Translucent roof and wall panels provided sufficient natural lighting The floor was concrete throughout. The building was unheated

Insecticide Formulations

Esbiol 200 – containing 20 % w/w (pure) S-bioallethrin and solvent (food grade mineral oil) to 100%.

The formulation was chemically analysed and active ingredient content found to be close to target (analytical reference 950815B03). The formulations also contained between 0.02 and 0.1% uvitex as a tracer

Application Equipment

A Turbocide GOLD system was installed in the aircraft hangar with two 4 nozzle blocks supported from the ceiling as shown in Figures 1

Formulation application rates

The Esbiol 200 was applied nominally at 3,6,9 and 12 mg ai m^{-3}.

Test Species

The insert species, numbers used and type of holding

container are summarised in Table 1.

Handling

Flying Insects

Ephestia, *Plodia* and *Culex* were transferred by suction pooter from rearing cages on the morning of treatment to test cages. *Musca* were transferred the afternoon prior to test. All cages were supplied with a sugar/water source.

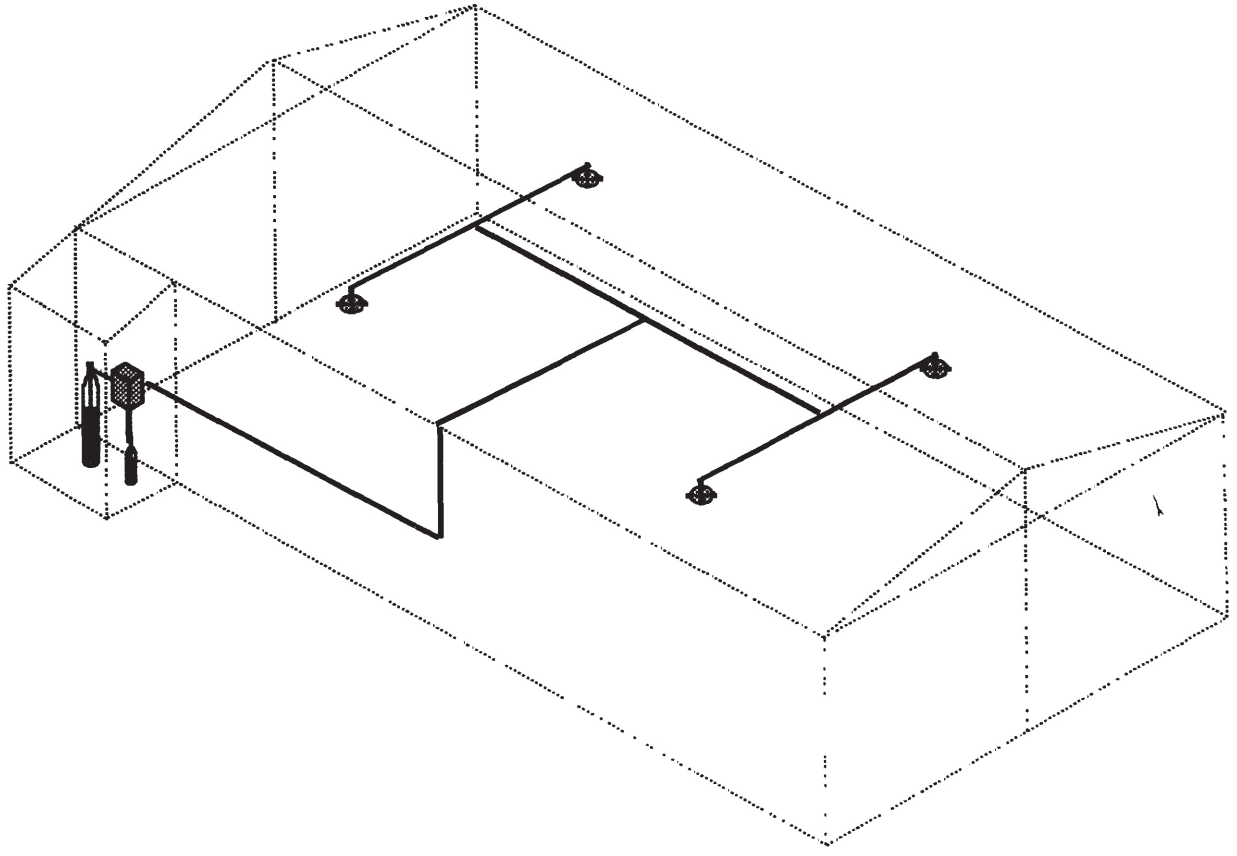

Fig. 1. Equipment application concept

Cockroaches

All cockroach species were prepared the day before test with *Blatta* and *Periplaneta* placed in lidded pint plastic pots with sides coated with Fluon® while *Blattella* were placed in net covered waxed paper cups On the morning of test pint pots were given a light dusting with talc to prevent escapes while *Blattella* were transferred to lidded plastic dishes coated with Fluon Dishes holding the Rockycany strain of *Blattella* were also dusted with talc.

Stored Product Beetles

On the morning of test stored product beetles were transferred from plastic holding tubes to fluon coated and lidded plastic dishes. Dishes holding *Lasioderma* were covered with a fine gauze prior to lidding.

House Dust Mites

Mites were transferred from culture on the morning of test to 4 cm diameter, 16 cm high lidded plastic pots; sides coated with Fluon

Positions

Once the insects were at the site, a total of 8 positions were selected in which to place insects and dust mites. Positions were either directly in or out of line with the nozzles and were either close to or at a distance from the nozzle blocks. In addition one position (1) was directly beneath a nozzle block. A duplicate set of insects was placed at each position to allow both 2 and 6 hour exposure of target species Flying insects were suspended at either 1.5 or at 5 meters from the floor, with cages hung on horizontal bars. Cockroaches, stored product beetles and dust mites were placed at all locations on trays on the floor.

Post Treatment Handling

Two hours following the start of spray application the knockdown of cockroaches, houseflies and mosquitoes was assessed for one set of insects. These were then collected from each position and returned to the laboratory, where

they were transferred to clean containers and supplied with an appropriate food and/or water source and monitored for kill at 1 day (flying insects) or 1 and 4 or 6 days (crawling and stored product beetles)

6 hours following treatment the remaining insects and house dust mites were collected and handled as above

Table 1. Insect species used in esbiol 200 evaluation.

Flying insects need in 5 cm diameter, 12 cm high netting covered cages, mesh type	numbers of Insects
Musca domestica 2 – 4 day old adult female CRBA strain	(25)
Culex quinquefasciatus 2 – 4 day old unfed adult female	(25)
Plodia interpunctuella 0 – 1 week old adult mixed sex	(10)
Ephestia cautella 0 – 1 week old	(20)
Crawling Insects (*Blattella* held in 5 cm high, 10 cm diameter at top, 9 cm diameter at base plastic dishes; sides coated with fluon, *Periplaneta* and *Blatta* held in 9,5cm diameter, 14 cm high plastic pint pots):	
Blattella germanica 2 – 3 week old adult male	(10)
Blattella germanica 2 – 3 week old adult male Rokycany strain	(10)
Blatta orientalis 1 – 3 week old adult male	(5)
Periplaneta americana 1 – 2 week old adult female	(5)
Dermestes maculatus 1 – 2 week old adult, mixed sex	(5)
Oryzaephilus surinamensis 0 – 1 week old adult, mixed sex	(20)
Tribolium confusum 0 – 2 week old adult, mixed sex	(10)
Tribolium castaneum 0 – 2 week old adult, mixed sex	(20)
Lasioderma serricome 0 – 1 week old adult, mixed sex	(25)
Lasius niger mixed age workers collected from a local garden	(10 – 20)
Dermatophagoides farinae 3rd nymphal and adult stage	(70 – 250)

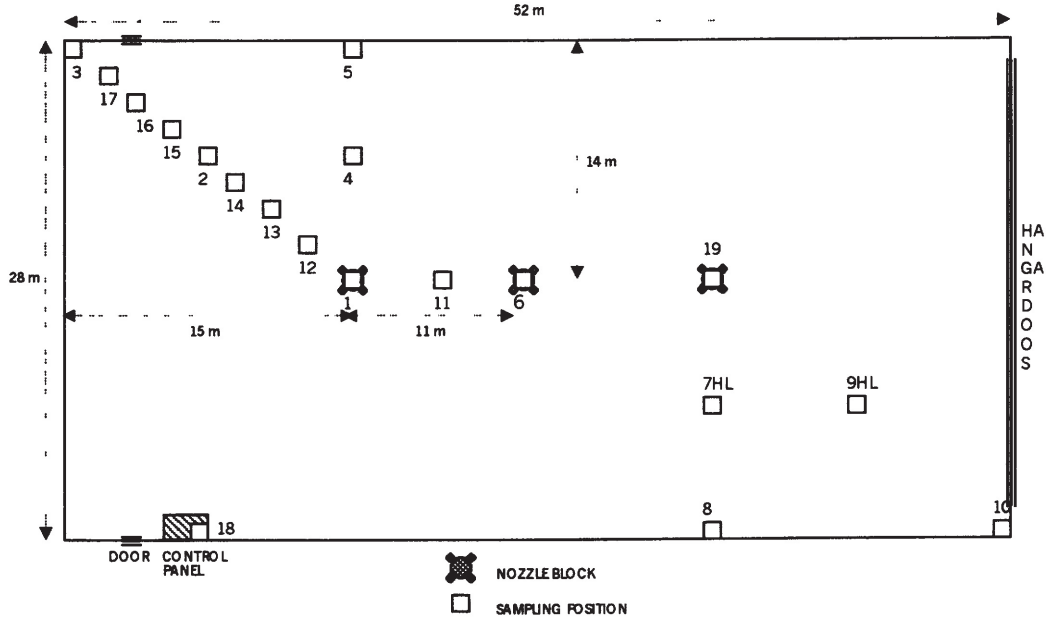

Fig. 2. Plan of hangar showing sampling positions

Physical Monitoring Equipment and Methods

Aerial concentration and droplet size

The positioning of the various methods used to measure physical spray characteristics is shown in Figure 2.

Berkeley Controls Quartz Crystal Microbalance Model C100A 10 – Stage Cascade Impactor (QCM)

This is a high precision wide range particle size distribution instrument combining the techniques of cascaded inertial impact nozzles and quartz crystal microbalance weighing to rapidly determine the aerodynamic size distribution of airborne particles or droplets.

The sizing is accomplished in ten cascade stages with individual output frequenca signals of each stage proportional to the mass collected in a particular size increment as defined by the stage nozzle. The aerial concentration can also be determined. Total airborne material is thus measured, as opposed to the active ingredient, from detection of tracer. This instrument has a low sample rate (250 ml/min) due to the high sensitivity of the Quartz crystal impacter collection plates and a cut-off range of 35 μm.

As the nature of this instrument meant that it could not operated remotely inside the area, an operator (wearing suitable protective clothing) remained within the test area throughout the duration of each test to record data.

The size distributions of the material collected by the QCM were calculated using the software QCMDATA. The density of the airborne material was taken as 1 g per cubic cm. Drift rate corrections were applied to the frequency differences used to calculate the size distributions. These drift rates represent the frequency changes which occur on each impactor stage whilst drawing air through the built in filter, rather than the sample inlet port.

Measurements were taken before treatment to establish background levels and at intervals throughout the monitoring period. Sampling was concentrated around position 7 and at ground level.

Floor deposit levels

Deposition of active ingredient was assessed using 15 cm by 6.5 cm pieces of aluminium foil stapled to pieces of white card placed horizontally on the floor of the hangar. The card was removed from the sampling position at the end of each run, typically 6 hours after commencing spraying. In order to get a measure of rate of deposition for selected positions, a card was removed after 2 hours in addition to 6 hours. The position numbers indicate duration as well as position. The sampling positions are shown in Figure 3 in which the distances between sampling points were as follows:

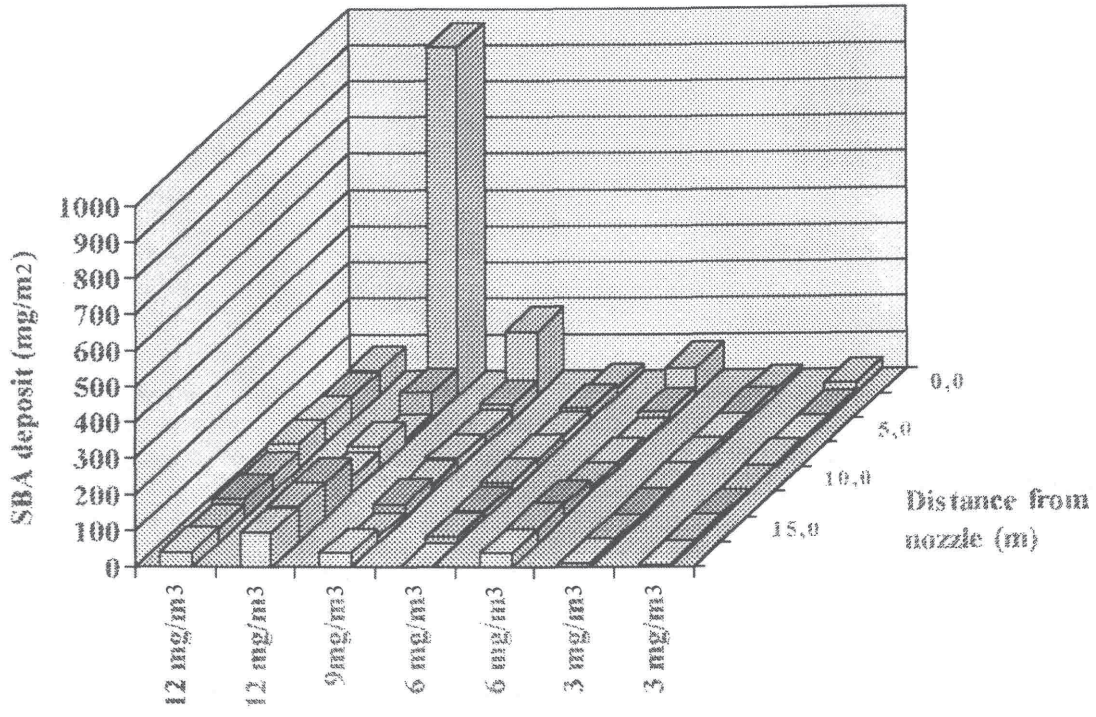

Fig.3. Physical evaluations – Esbiol floor deposits versus distance from nozzle.

1 – 12 – 13 – 14 – 2 – 15 – 16 – 17	= 2,5 m
19 – 9 – 10	= 10 m
1 – 2 – 3	= 10 m
1 – 4 – 5	= 7 m
19 – 7 – 8	= 7 m
A – C	= 22,5 m

After use, the foils were carefully detatched from the backing card, folded and placed into 8 dram tall soda glass vials for subsequent extraction with hexane and analysis of Uvitex OB.

Methods of analysis

Uvitex OB

All samples were analysed for the fluorescent tracer, Uvitex OB, using a Perkin Elmer LS2 filter fluorimeter hexane extracts obtained, it was necessary to reduce the sensitivity of the fluorimeter thus extending the operating range. The emission wavelength was set to 500 nm to achieve this. The linearity of the response was checked with standard solutions of Uvitex OB in the range of 10 – 500 ng/ml Standard solutions of 325 ng/ml Uvitex OB in hexane were normally used to calibrate the fluorimeter so that a direct readout of Uvitex OB in ng/ml was given. A known volume of hexane was added to each of the samples to extract the Uvitex OB. These extracts were then analysed directly, or after further dilution. From the concentration of tracer and volume of hexane used, the total quantity of Uvitex OB in the sample was calculated.

Container washout studies

Following each treatment the ejector was removed and 100 ml of hexane poured into the concentrate cylinder. The cylinder was carefully rolled on its side so that the hexane washed the interior. Approximately 10 ml of the washings was collected in a clean vial for analysis in the laboratory. A 1 ml sample was diluted with a known volume of hexane and analysed for Uvitex OB fluorescent dye.

Operating procedures

The Esbiol 200 required for a given test was poured into the concentrate cylinder through the threaded hole exposed in the top when the ejector coupling is removed. Recording the weight added was recorded on an electronic balance The ejector coupling was screwed into the top of the cylinder One or two carbon dioxide cylinders, as appropriate, were connected to the cylinder manifold

The capture of temperature and humidity data were commenced and background airborne material obtained using the TSI Respirable mass monitor and the QCM cascade impactor, prior to spraying.

The Turbocide GOLD Operating System was turned ON at the control panel, the start time recorded and all air sampling devices activaded and operated at intervals throughout the run. Observations were recorded of the visual behavior of the spray in each run.

During discharge of the system, the times were recorded at which visible changes were observed in output from the nozzles. In particular a record was made of the times at which spray started and finished.

when it was necessary for the operators to enter the treated area, suitable protective clothing and equipment were worn.

After completion of the run, 2 hr and 6 hr deposit samplers and remaining air samplers were recovered and placed in labelled vials for subsequent analysis.

Between tests all the doors to the treatment area were opened for ventilation for a minimum of 2 hrs beyond each 6 hr test. Only one test run was carried out in a day.

Results

Biological results are summarised in tables 2 (flying insects), 3 (cockroaches) and 4 (stored product beetles).

Dose related responses were observed. The relationship between dose and mortality was particularly apparent against stored product beetles, since performance were generally below 100 % kill

The mean kill of insects across all treatment levels demonstrates a slight improvement in kill performance (approximately 10 %) between 2 and 6 hour exposures.

Overall very low levels of control mortality were observed for the majority of insect species

Esbiol 200 caused high levels of knockdown of all insect species assessed, at all the dose rates tested, with 100 % knockdown observed at 2 hours in all cases where it was measured

Esbiol 200 exhibited 100 % kill of all flying insects at the lowest dose tested (3 mg m^{-3}) except against Musca; Esbiol 200 was required at 9 mg m^{-3} rather than3 mg m3 SBA to give > 90 % kill at 2 and 6 hours exposure.

The performance of Esbiol 200 was excellent against *Blattella* including the Rokycany (pyrethroid resistant) strain, however although giving 100 % knockdown it was not as effective for kill against *Periplaneta* and *Blatta*, although control could be expected within the concentration range tested.

100 % kill of black ants was recorded

Good kill was recorded against *Lasioderma*.

Physical parameters

Examples of the QCM droplet size data for up to two hours after spraying are shown in Figures 3 and 4. The data is presented as droplet diameters where < 10%, < 50% and < 90% by mass are under size. The < 50% corresponds to the mass median diameter (MMD) A summary of the deposit level on the floor is given in Figure 3. Wash out data

on the cylinders is given in Table 5.

Conclussions and Discussion

The trial demonstrated that Esbiol 200 applied through the TURBOCIDE GOLD SYSTEM provides adequate control of different insect species that could be pests in warehouses or food stores Detailed measurements of the physical parameters of the airborne spray and subsequent ground deposits demonstrate that the dispersion is optimal for insect control. The biological and physical data can be used to model the biological performance of TURBOCIDE GOLD under different conditions of dose and application.

Table 2. Knockdown and kill of flying insects after exposure to Esbiol 200.

INSECT SPECIES	DOSE RATE mg m^{-3}	2HR EXPOSURE		6HR EXPOSURE	
		KD AT 2HRS	KILL AT 24 HRS	KD AT 6HRS	KILL AT 24HRS
Musca domestica	3	100	81	100	85
	6	100	84	100	90
	9	100	99.5	100	99.5
Culex quinquefasciatus	3	100	100	100	100
	6	100	100	100	100
Plodia interpunctella	3	100	100		
	6	100	100		
Ephestia cautella	3	100	100		
	6	100	100		

Table 3. Knockdown and kill of cockroaches after exposure to Esbiol 200.

INSECT SPECIES	DOSE RATE mg m^{-3}	2HR EXPOSURE		6HR EXPOSURE	
		KD AT 2HRS	KILL AT 24 HRS	KD AT 6HRS	KILL AT 24HRS
Blattella germanica	3	100	81	100	85
	6	100	84	100	90
	9	100	99.5	100	99.5
	12	-	-	100	100
Blattella germanica	3	-	-	100	99
Rokycany strain	6	-	-	100	98
	9	-	-	100	100
	12	-	-	100	100
Periplaneta americana	3	100	45	100	75
	6	100	92	100	85
	9	100	93	100	99
	12	100	99	100	99.5
Blatta orientalis	3	100	43	100	66
	6	100	100	100	99
	9	-	-	-	-
	12	100	100	100	100

Table 4. Knockdown and kill of crawling insects after exposure to Esbiol 200.

INSECT SPECIES	DOSE RATE mg m^{-3}	2HR EXPOSURE		6HR EXPOSURE	
		KD AT 2HRS	KILL AT 24 HRS	KD AT 6HRS	KILL AT 24HRS
Dermestes maculatus	3	-	-	4	7
	6	-	-	-	61
	12	-	-	-	97
Tribolium confusum	3	-	37	-	25
	6	-	58	-	59
	12	-	93	-	97
Tribolium castaneum	3	-	41	-	56
	6	-	63	-	77
	12	-	89	-	99
Oryzaephilus surinamensis	3	-	22	-	28
	6	-	45	-	61
	12	-	93	-	94
Lasioderma serricome	3	-	77	-	90
	6	-	100	-	100
	9	-	100	-	100
	12	-	100	-	100
Lasius niger	3	-	100	-	100
Dermatophagoides farinae	9	-	75	-	78
	12	-	51	-	68

Table 5. Conecetrate Container Wash-out Data.

Dose of active (mg m^{-3})	Product loaded (g)	Uvitex OB sprayed(mg)	Wash-out or Concentrate discharged(% w/w)
3	262.5	255.9	99.818
6	524.6	511.5	99.960
9	786.5	766.8	99.966
3	262.6	256.0	99.882
12	1048.7	1022.0	99.980
6	524.5	511.4	99.976
12	1048.9	1023.0	
			Mean 99.932