# TRIBOLIUM

## Information Bulletin

## 4

## March 1961

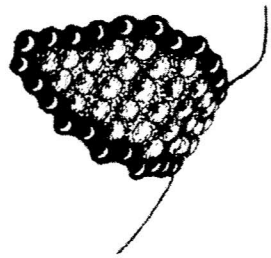

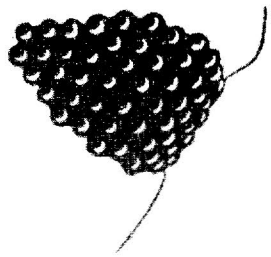

MATERIAL CONTRIBUTED BY WORKERS ON TRIBOLIUM
AND OTHER COLEOPTERA

BIOLOGICAL LABORATORY
COLD SPRING HARBOR, N.Y.

# TRIBOLIUM INFORMATION BULLETIN

Number 4

(Issued in 300 copies)

Editor: A. Sokoloff, Biological Laboratory, Cold Spring Harbor, N. Y.

1961

## NOTE

TIB is not an official publication. Information appearing in the bulletin should not be used for publication without the consent of the author unless the note "Reference authorized" accompanies the article. Otherwise permission to quote from the bulletins must be obtained from the authors.

# TRIBOLIUM INFORMATION BULLETIN

Number 4

March 1961

FOREWORD

The size of the present issue of Tribolium Information Bulletin requires a few words of explanation. In the mind of the editor this is the result of two things: First of all, it reflects the interest of various investigators in the bulletin as an informal means of communication and exchange of ideas. The response to the call for contributions to the bulletin on such short notice, particularly by investigators overseas, is especially gratifying. It is hoped that investigators using Tribolium and related organisms will continue to avail themselves of this publication to communicate their findings to their colleagues. Secondly, the size of the bulletin is greater because of the extensive bibliography included at the end of the bulletin. Part of the titles were to be included in TIB-3. That issue, because of certain circumstances, was hastily prepared and a fairly large number of titles were overlooked. A further reason was that in checking various bibliographies it was evident that the survey of the literature on Tribolium and other flour beetles was far from complete, in spite of the fact that I had gone over the Biological Abstracts rather thoroughly. Therefore, for my own benefit, at least, I decided to go through the Bibliography of Agriculture from the beginning. Other titles were obtained from various other literature citations, from the Zoological Record, and from current journals. With some 50 titles kindly provided by Dr. John Stanley, McGill University, I feel very confident that the Tribolium Information Bulletins 2, 3, and 4 include a fairly complete bibliography on Tribolium, Latheticus, and Tenebrio between 1926 and 1960. The only titles deliberately omitted were those specifically dealing with insecticides and fumigants as affecting these organisms, since there is now a publication--Insect Toxicologists' Information Service (ITIS) edited by Dr. D. Dresden, Vondellaan 6, Utrecht, Netherlands --which fulfills this need. Perhaps investigators with extensive bibliographies on these organisms will supply the editor with any references that may have been overlooked for inclusion in a future issue of TIB.

The bibliography is not restricted to references dealing with Tribolium by any means. Thus, the section on genetics, for example, includes all the available bibliography dealing with genetics (sensu latissimo) of the order Coleoptera. Because the present bibliography includes over 2,500 titles, I have tried to group them into various sections--from anatomy and histology to teratology. As some categories are rather broad, some references could have been included in more than one category. (In going over the list again while proofreading I would have included some of the titles in a different section.) It is hoped, however, that by this scheme the reader will not have to go through the whole list more than once in search of one or more titles for a specific subject. In a few references the initials of the author are missing. These titles were obtained from German journals and the author of the paper gave only the last name. In some cases the journal where the original article was published was not available and the missing initials could not be supplied. In one instance only the year has been left out. As for the rest, I believe that the references are reliable enough for bibliographic reference.

The Tribolium Information Bulletin was originally "prepared and published as a service to agriculture" by the research staff of the W. H. Miner Agricultural Research Institute, Chazy, New York. With the restriction that TIB serve agriculture no longer in effect, the editor feels that TIB can best serve its present function as a medium of exchange by investigators using any

Coleoptera easily reared in the laboratory. The subject matter to be covered is roughly that included in the fields covered so far by the bibliography. Of course, if the work on tenebrionids grows to large enough proportions, it would still be possible at a later date to restrict the use of this publication to persons engaged in research on tenebrionids or to Tribolium itself. Therefore, the editor would urge all those receiving this publication to notify him what their feelings are in regard to this suggestion as well as any comments they may have in regard to the present issue.

Thanks are due to the various collaborators who contributed so promptly to this issue of TIB, to my wife Barbara Bryant Sokoloff for helping proofread part of the bibliography, and to Dr. Carl Epling, Botany Department, University of California, Los Angeles, California, in whose laboratory this issue of TIB was prepared. The publication of this issue of TIB was made possible by a grant (RG-7842) from the U. S. Public Health Service to the writer.

A. SOKOLOFF

Los Angeles, California
March, 1961

## EDITOR'S RANDOM NOTES

Colleagues who knew the members of the research staff at the W. H. Miner Institute may be interested to know their whereabouts and their present duties. Dr. James H. Bywaters is now associated with Yoder Feeds Inc., Keota, Iowa. Aside from being involved in sales of turkey poults and feed, Dr. Bywaters is starting a breeding program to develop better turkeys. Dr. Earl L. Lasley is in charge of the research program at Farmers' Hybrid, Hampton, Iowa. Dr. Robert R. Shrode has taken a position as statistician for De Kalb Agricultural Association, Inc., Sycamore, Illinois. The writer, while waiting for the results of his application for a grant from Public Health Service, took a temporary position as Research Associate (in Botany!) at UCLA, helping in a program of research in population genetics of *Drosophila pseudoobscura*, which involved mutation rates of lethals associated with various third-chromosome arrangements, and location of these lethals in reference to dominant markers. Shifts in position came about because of sweeping changes in policy on the part of the trustees following the death of the chairman of the Miner Foundation, Mr. Albert P. Withall.

* * * * *

The editor would like to draw the attention of those who contemplate using Tribolium in genetics courses to a small publication prepared for the Lyon Science Club by Messrs. Harold Eddleman, Larry Brewer and Larry Strange, under the guidance of Dr. A. E. Bell. This publication, in ditto form, costs $0.15 and it provides a great deal of information on methods of culture of flour beetles. Mr. Eddleman is also starting a profit-free enterprise: for $1.00 he will provide half a dozen seeding cultures of wild type and mutant stocks with instructions. Both stocks and the booklets can be obtained by writing Mr. Eddleman, science teacher at Salem High School, Salem, Indiana.

* * * * *

At the Genetics Congress held at Montreal three years ago a small nucleus of investigators interested in Tribolium met informally to get acquainted. Another meeting is planned this summer at the AIBS meetings at Purdue. Please note the announcement elsewhere in this issue of TIB.

* * * * *

The cut on the front cover was prepared from a photograph of the illustration in Park's 1937 paper, "The inheritance of the mutation 'pearl' in the flour beetle *Tribolium castaneum* Herbst," reporting the first mutation in Tribolium. It shows the eye of a mutant and the eye of a normal beetle.

* * * * *

## NEW MUTANTS

### Report of Harold L. Eddleman

New Mutants (all occurred in x-irradiated *Tribolium castaneum* Purdue Foundation +/+ type).

*dusky* (*d*). (Eddleman & Hudson) Body color extremely dark. Color resembles black mutant (McGill), except that dusky mutant has a reddish tint and the appendages are less opaque. Young adults of black mutant overlap color of dusky mutant. Reproductive rate estimated at 70% of that of wild type. An autosomal recessive.

*chestnut* (*c*). (Eddleman) Eye color red-brown deepening to chestnut within ten days. Old adults can be distinguished from wild type only with some difficulty. Matings with pearl mutant yield wild type offspring in $F_1$. Does not have much, if any, effect on reproductive rate. Autosomal recessive.

*deformed* (*Df*). (Eddleman) In heterozygous individuals the 4 to 7 distal segments of antennae are fused. Shape of fused area is variable. It may have shape of a ten-pin, be bent sharply, or be deeply incised near tip. Only two single pair matings are completed: Df/+ ♂ x +/+ ♀ yielded in $F_1$ wild ♀, deformed ♀, wild ♂, deformed ♂, in ratio of 5/3/4/7 respectively; pd/pd ♀ x Df/+ ♂ yielded in the F : wild females, deformed females, and affected males in the ratio of 3/2/3 respectively. Since paddle is sex-linked all males are expected to have affected antenna. Since half the females were wild type, we have further evidence that suggest that Df is lethal in the homozygous fraction of the rate for wild type beetles. (Additional studies involving greater numbers of matings are under way.)

*Unnamed mutants* (none are thoroughly studied).

We have three mutants which resemble color of sooty mutant, but all intermatings have produced wild type offspring.

One mutant bears an engraved transverse groove on the metasternum just anterior to the coxa. One or both sides may be affected. Another mutant bears a large dent or pit on the mid-ventral line of the metasternum.

Another mutant involves a whitish enlargement of the sex spot in males.

### Report of D. J. MacDonald and N. J. Peer

*Eyespot* (*es*). A new mutation of *T. confusum*, eyespot (*es*), appears as a transparent area in the center of the eye and is due to a sex-linked recessive gene located 37.6 crossover units from the lethal Striped. A survey of several related and unrelated *T. confusum* strains has revealed the presence of other eye variants. The possibility that *T. confusum* populations may be polymorphic for these is suggested by the high frequencies at which they are found.

Report of A. Sokoloff

A. Tribolium castaneum

1. divergent elytra (dve). Sokoloff. Spontaneous. Single male imago found among imagoes emerging from Chicago wild type pupae included in a biopack sent 55 miles into space Dec. 4, 1959. Sex-linked recessive, with at least semi-lethal effects. Identifiable in the pupa by the fact that the elytra are somewhat more divergent and concave than in the normal pupa (where elytra are roughly convex). In the adult the typs of the elytra diverge to a more pronounced degree than in the autosomal mutant "split." Elytra may present an asymmetrical appearance, one being more divergent, and sometimes dorsoventrally sinuous, than the other. Imagoes die at an early age. Experiments are under way to determine the position of this gene on the X chromosome.

2. blistered elytra (ble). Sokoloff. Autosomal recessive with variable expression and incomplete penetrance. Spontaneous in a Chicago wild type stock. May be detectable in a few pupae, but usually blister develops at metamorphosis. A blister of varying size is present on the proximal, middle or terminal portion of one or both elytra. In its extreme expression the blister may be as large as or larger than one half the size of the elytra. In contrast to Drosophila the fluid in the blister remains trapped in the sclerotized elytra, and it is not withdrawn into the haemocoele. Therefore, the stock may be useful for obtaining fluids for biochemical studies. Viability of extremely blistered imagoes is variable so that stock is best maintained by selecting beetles with small blisters, or with blistered elytra as near normal as possible.

3. curved appendages (ca). Sokoloff. Spontaneous in a mating of sp male x sp + py pd / + ma + pd female. Autosomal recessive with variable expression and incomplete penetrance, the gene having pleiotropic effects. In its extreme expression the antennae are reduced in size (consisting of 7-9 annuli); acquire a curved appearance with the distal ends directed medially in front of the head. The legs are also short and deformed presenting a twisted or curved appearance. In the average mutant only one member of a pair of legs may be affected. Sometimes only the femur and more frequently only the femur of the forelegs is affected. Viability of the stock: fair.

4. extra urogomphi (eu). Lasley and Sokoloff. Spontaneous in a McGill black stock. So far the character has been found only in the larva and the pupa; it is not known what morphological changes carry over to the imago. The progeny of a single pair of imagoes derived from pupae having two pairs of urogomphi gave 39 normal and 23 abnormal males and 16 normal and 28 abnormal females. Some of the abnormal individuals had four urogomphi and others only three. The extra urogomphi are located between the segments bearing the genital lobes and the normal urogomphi. They are generally shorter than the terminal urogomphi. Some of the pupae derived from this mating, although not bearing supernumerary urogomphi, give the suggestion of having an extra abdominal segment between the genitalia and the terminal urogomphi. This preliminary test is suggestive of an autosomal dominant trait lethal in the homozygous and semi-lethal in the heterozygous condition or incomplete penetrance. Further tests are under way.

5. microcephalic (mc). Sokoloff and Lasley. Spontaneous in linkage or allelism studies between the pink and pearl mutants derived from Chicago wild type stocks. Autosomal recessive with complete penetrance, good but variable expressivity. In many ways it resembles the autosomal dominant microphthalmic (Mo) of Sokoloff (see TIB-3). The primary effect of the gene is to reduce the size of the cranial part of the head. Since neither the genae nor the anterior parts of the head are affected, the head appears roughly like a barbed harpoon, the barbs being represented by the genae. In the wild type imago the cranium is much broader, extending outward almost as far as the genae. The eye, as in Mo beetles, is variably reduced in size, and if reduced in size the dorsal facets disappear first, the remaining facets thus being confined to the ventral portion of the head. In some cases the eye on one side may be altogether wanting. If these beetles are selected, they produce progeny with eyes completely missing, or if either or both eyes are present they bear very few facets. It is worthy of note that if the eye is missing not only the ommatidia but the ocular diaphragm will be absent. In this respect mc differs from squint, since in the latter the ommatidia fail to develop but the ocular diaphragm is present. The mutant can easily be identified in the pupa by the shape of the head behind the genae. Cursory examination of the mutant larvae leads to the conclusion that the gene is identifiable only if one or both of the larval ocelli are missing. mc is linked neither to black nor to pearl.

6. bar eye (Ba). Lasley and Sokoloff. Spontaneous in a pink-eyed stock. Preliminary studies indicate that the gene is a partially dominant autosomal gene. The eye, normally extending in width the equivalent of 8-10 facets, is very narrow, in the extreme form extending only 1-3 facets. In homozygous pearl or pink and extreme bar-eyed beetles the outline of a reduced ocular diaphragm is evident; thus, the mutant resembles squint except that a few ommatidia are present. Few homozygous Ba/Ba survive. Those that do are eyeless or nearly so. Mutants are detectable in the pupa stage.

7. pegleg (pg). Lasley and Sokoloff. Spontaneous in a stock of pink ($p^{Pk}$). Autosomal recessive. Mutant has good penetrance but variable expression. In the adult only one or both members of any pair of legs may be affected and to a varying degree: a) Only the tarsi may be missing, the tarsal claws may be attached to the tibia or may be missing. b) All tarsi and part of the tibia may be missing and the tarsal claws absent; the tibiae are of various lengths, and usually taper toward the distal end. c) All tarsi are missing; the tibiae are badly deformed being shorter and thicker than the normal; the tarsal claws are attached to the lateral aspect of the distal end of the femur. d) All podomeres of a pair of legs missing, down to but not including the coxa. e) All podomeres present in all legs but the femur is short and curved; the tibia is badly twisted--remindful of the condition described for the dfl (deformed legs) mutant (see TIB-3). In what is regarded as the extreme form the adult has all three pairs of legs affected; the femur is short and thick, bearing tarsal claws on its distal lateral aspect. The tibiae appear as short pegs of unequal length. The shortness of the legs disables males to the extent that they cannot copulate, and both sexes may die because of an inability to right themselves if they should fall on their backs on the surface of the flour. Mutant is detectable at the larval stage. Preliminary tests indicate linkage of pegleg with pearl, giving recombination values of about 30 per cent. However, a deficiency of the pegleg class encourages caution in regard to the estimate of recombination.

8. vestigial elytra (vge). Sokoloff and Lasley. Spontaneous in a stock of Chicago black and later in a stock of Chicago wild type. Lethal in the imago stage, probably due to inability of the beetle to control dehydration resulting from exposure of varying portions of the unsclerotized dorsal surface of the abdomen. The elytra may be almost completely wanting (a condition which is rare), or may be shortened, sometimes asymmetrically; elytra may appear almost normal on one side, shorter to varying degrees on the other. The tips of the affected elytra may have roughly a cuneiform shape. In other cases the short elytron is deeply cleft, appearing more or less bifurcated and sometimes tridentate. In a few instances the elytra may be curved ventrally, drooping on either side of the abdomen. In some matings larval mortality is exceedingly high, suggesting at least a semi-lethal effect at that stage. Despite efforts to maintain the stock for linkage studies by selecting the longest winged and most normally-appearing imagoes, the stock has been lost.

9. black ($b^S$). Sokoloff. Spontaneous in progeny derived from beetles emerging from eggs of Chicago wild type sent 55 miles into space. Preliminary tests suggest that it is a semi-dominant phenotypically identical with Chicago black and McGill black. Tests for allelism are under way.

10. pink ($pk^S$). Sokoloff. In $F_2$ of irradiated Chicago wild type females mated to py pd. Judging from the appearance of the mutant in the $F_2$ in only one out of many identical matings and other considerations (see note on Irradiation Studies in Tribolium in TIB, this issue), this mutant may have been X-ray induced. Resembles the sex-linked red in phenotype, but it is an autosomal recessive. Tests of allelism with Lasley's pink ($p^{Pk}$) have not been performed.

B. Tribolium confusum

1. blistered elytra (ble). Sokoloff. Autosomal recessive with variable expression, incomplete penetrance. Spontaneous in Chicago wild type stock. Resembles blistered elytra in T. castaneum (q.v.) but beetles with extreme expression bear larger blisters and the elytra may present a wavy appearance, the waves being directed in a dorso-ventral plane. Large blisters may be located in any part of the elytra. Small blisters can be found near their lateral margin(s). Blisters usually develop at metamorphosis. As in T. castaneum the blisters retain a drop of fluid throughout the lifetime of the adult (barring accidents to the elytral appendages), so that the mutant may be useful for comparative biochemical studies. Viability of the mutant depends on the size of the blister and the degree of distortion of the elytra. Selection of beetles with terminal or middle blisters results in the same range of expression of the character in the progeny. Maintenance of the stock not too difficult if the beetles with tiny blisters are selected or if the cultures are started with a large number of mutants.

2. miniature appendaged (ma). Sokoloff and Bywaters. Spontaneous in a Chicago wild type stock. Sex-linked semi-lethal recessive having pleiotropic effects: the whole body, as in T. castaneum ma beetles, is affected, and if proper allowance is made for the difference in the normal general appearance of the two species, to the same degree. The effect is best detected in the elytra (which cover only the proximal thirds of the abdomen), and in the podomeres of all legs (which become short and thick).

3. pink eye (pk). Sokoloff. Spontaneous in a McGill wild type stock. Autosomal recessive. Best detected in young imagoes one or two days old. When the imagoes are young the eye resembles pearl in being "spectacles" except that the area medial to the ocular diaphragm is pink or reddish. On aging, the medial part of the eye becomes progressively darker until, on first examination, the eye becomes almost as dark as the normal eye. However, even in very old adults it is still possible to identify the mutant with almost 100 per cent accuracy by a) directing a strong beam of light to the head which brings out a reddish spot in the middle of the ventral portion of the eye; b) rotating the beetle on its side so that the eye is viewed from the lateral aspect; or c) intercepting the beam of light with any object and casting a shadow over the eye. Preliminary tests indicate that this pink is not allelic to pearl, a situation contrary to that found for the same genes in T. castaneum where these two mutants were found to be allelic (see section on New Mutants in TIB-3).

## NOTES AND NEWS

### RESEARCH NOTES*

Berck, B. and E. A. R. Liscombe. *Susceptibility of Tribolium confusum and Cryptolestes ferrugineus to ethylene dibromide and carbon tetrachloride.

In current investigations of the $LD_{50}$ values of fumigants applied in the vapor phase against various species of stored products insects, it was observed that, when ethylene dibromide was applied in the range 2-8 mg./l. at 25° C. for 5 hours, T. confusum adults were significantly more susceptible than C. ferrugineus adults. However, when carbon tetrachloride was applied in the range 60-240 mg./l., C. ferrugineus adults were more susceptible than T. confusum adults. Further studies are being conducted regarding the comparative effectiveness of various fumigants against these two species.

Canada Department of Agriculture
Research Branch
Winnipeg, Manitoba, Canada

Dawson, P. A note on morphological variants in Tribolium castaneum.

Several morphological variants have been discovered in T. castaneum cultures. Their inheritance appears to be based on a more complex situation than a monogenic one. These under analysis include white (with a variable expression of lack of pigment in legs, antennae, and elytra), misaligned antenna, and elbowed antenna.

Department of Genetics
University of California, Berkeley

Ducoff, Howard and Harry E. Walburg, Jr. *Radiation induced abnormalities in Tribolium confusum.

Our studies on the radiation response of larvae of a wild type strain of Tribolium confusum (Anat. Rec. 137: 351 (1960)) have been extended to include the influence of dose, temperature, and age at the time of irradiation on the development of adult abnormalities.

X-irradiation (about four kiloroentgens) during all but the latest larval stages markedly lowers the incidence of adult emergence. Irradiation during late pupal stages is without apparent effect. However, when irradiation is performed during late larval or early pupal stages, the incidence of emergence is undiminished, but the imagoes are all grossly abnormal in morphology. The abnormalities resemble the mutation split elytra (spl.) described by other Tribolium investigators. The extent of the deformity varies from a slight separation of the elytra posteriorly to a severe twisting ventrad. The severity of the deformity appears to be correlated with the degree of injury because 1) higher doses of radiation yield higher proportions of the more

* An asterisk before the title of a note indicates reference authorized.

severe-appearing deformities and 2) the survival time of the adults with severe deformity is shorter than that of those with slight deformity.

It is interesting to note that irradiation is not unique in the production of this phenocopy. Exposure of unirradiated, early pupae to 4° C. for 24 hours results in a 20 per cent yield of abnormal adults. We find far fewer than one per cent such abnormalities in our control population (raised at 30° C.).

Department of Physiology
University of Illinois
Urbana, Illinois

Dyte, C. E. and Dorothy Blackman. *A pearl mutant in Gnathocerus cornutus F.

In August, 1958, pearl-eyed pupae were isolated from a laboratory stock of G. cornutus. This stock has been in culture for at least ten years, its origin being unrecorded. Other cultures of this species in this laboratory were contaminated with pearl, so for test crosses a culture was started with beetles from a flour mill in Belfast, N. Ireland. No pearl-eyed beetles have been found in this last stock during seven generations of laboratory culture.

Crosses between the two stocks yielded an $F_1$ of normal eyed beetles and an $F_2$ of 367 beetles of which 87 were pearl and 280 were normal. There was no evidence of sex-linkage. A limited number of back-crosses confirmed that pearl in G. cornutus is an autosomal recessive gene. The larval ocelli of pp homozygotes are unpigmented, and the structure of the compound eyes in pp beetles appears to be similar to that in pearl Latheticus as described by Wolsky and Zamora.

Pest Infestation Laboratory
London Road
Slough, Bucks., England

Dyte, C. E. and Dorothy Blackman. *Possible homology between the pearl mutants.

The examination of cultures maintained at this Laboratory revealed pearl-eyed individuals of Tribolium confusum, Gnathocerus cornutus F., Tenebrio molitor L. (Tenebrionidae); Dermestes maculatus Deg., Trogoderma granarium Ev. (Dermestidae); Carpophilus dimidiatus F. (Nitidulidae); and Cryptolestes turcicus (Cucujidae). They are also known in T. castaneum and Latheticus oryzae. "Pearl-eyed" D. maculatus and T. molitor are probably due to the genes described respectively as white eye (ww) and fleischfarbenen Augen (gg). If this is so, then "pearl" in the five Tenebrionids and the two Dermestids is due to an autosomal recessive gene. The same is probably the case in the Nitidulid and Cucujid mutants which are now being studied. The similarity of these mutants suggests that they may be homologous as appears to be the case with mutant coat colors in many rodents and carnivores. In all these pearl mutants (except possibly in D. maculatus which has not been studied), the ocelli of the larvae lack pigment. Other pleiotropic effects of pearl in the different species are being studied to see if they support the hypothesis.

Pest Infestation Laboratory
London Road
Slough, Bucks., England

Eddleman, H. L. Irradiation studies in Tribolium. Our work consists of examining X-irradiated beetles for mutants (a project simple enough in which high school students can participate). Professor A. E. Bell and Mr. Alan Bartlett of the Population Genetics Institute, Purdue University, provided adult beetles which had received an exposure of 3200 roentgens. These were inbred in a mass mating and the eggs collected for five days. The resulting $F_1$ was mated as single pairs. From these single pairs, sib-matings were made. Finally the $F_3$ was examined for visible mutations. From 747 adults in the $P_1$, eight new visible mutants were obtained. Two of these, the sex-spot aberration and the groove in the metasternum, have been rediscovered in other stocks which may indicate that these mutants were present in the wild type foundation.

Salem-Washington Township High School
Salem, Indiana

Eddleman, H. L. Biochemistry of eye pigments. In an effort to learn something of the biochemical relation between the different eye color mutants: pearl, pink, red, and chestnut, we recently began transplanting eyes from these mutants to other eye mutant or wild type hosts. Dehydration has resulted in the death of most transplants.

Salem-Washington Township High School
Salem, Indiana

Howe, R. W. *Developmental time and weight in *Tribolium castaneum*. In most life cycle studies with stored products insects, a small proportion of the individuals grow slowly and pupate inconveniently later than the rest of the population. If results are expressed as an emergence curve, this has a protracted tail usually bearing a hump, so that no simple mathematical formula can be fitted to the curve. Usually some of the pupae forming the tail hump are markedly heavier than those produced earlier.

An experiment was carried out with some 800 *Tribolium castaneum* individuals grown singly on 220 mg. of wheatfeed (middlings) at 22.5° C, 70% R.H. Each larva was examined daily near pupation and weighed when the pupa was formed. The larvae were obtained from eggs laid by ten pairs of isolated beetles.

The weight of pupa plotted against larval developmental time as scatter diagrams, separately for each sex, makes it possible to divide the population into overlapping quicker and slower growing sections on the basis of weight. In each section the weight decreased as the developmental time increased. There still remained two or three stragglers representing perhaps an even slower group.

In this experiment about 20 per cent of the beetles were slow growing in contrast to the usual 5 per cent or less among eggs obtained from mass cultures, but the overall emergence curve for each sex was typical with a secondary hump and a tail. The curves obtained by splitting the populations

into two groups, however, were simple and could be represented straightforwardly by a lognormal or Pearson type III curve. Although it is unlikely that storage insect populations really consist of two clear-cut groups, it is evident that sufficient variations exist to make it difficult at times to compare results in different environments. The weight of pupae will often help us to make the decision whether or not certain individuals may be rejected from the experimental results.

Pest Infestation Laboratory
London Road
Slough, Bucks., England

Lloyd, M. *The artificial production of "pink" flour.

From the point of view of what the beetles do, flour-conditioning by Tribolium populations necessarily has four distinct components. First, the animals eat the medium and produce fecal pellets, which of course differ from fresh medium in respect of particle size, nutritive value, and excretory wastes. Secondly, they die and release the dried fragments of their bodies into the medium. This aspect may be of overriding importance if the culture is infected with sporozoans. Thirdly, eggs hatch and immature stages moult, leaving behind egg shells and exuviae, which eventually become comminuted and dispersed. Fourthly, adult beetles release ethylquinones into the medium from their abdominal and prothoracic odoriferous glands, which turns the flour pink and gives it an offensive odor. It is well known from the extensive work of Park and others that conditioned, versus fresh, medium has significant effects on fecundity and cannibalism rates, larval development, and adult behavior. In general, however, it is not known which components of conditioning are responsible for these effects. A beginning was made by Loconti and Roth (1953), who demonstrated the direct repelling effect of concentrated ethylquinones on adults. Obviously it would be helpful to have an easy means of producing culture media which have been affected in any one of the possible ways but not in the other ways. Some of these techniques are self-evident, but others require special manipulation. The purpose of the present note is to point out an easy way to produce 'pink' flour, i.e., medium which has been affected by the products of the adults' odoriferous glands but not in any other way.

The apparatus is shown in Figure 1. Several grams of adult beetles, with no medium at all, are suspended over fresh medium within a small jar. The beetles are tightly confined in fine-mesh bolting silk by a rubber band, and the bolting silk suspended within the jar by another rubber band placed around its mouth. This preparation is placed in the freezing compartment of a refrigerator with some suitable cover, such as half a petri dish. After a day in the refrigerator the beetles will all have died with the violent expulsion of their ethylquinones. The jar is then removed from the refrigerator, the cover taken off, the dead beetles left in place, and the jar allowed to stand exposed to moist air. Ideally, this should be done in an incubator of controlled temperature and humidity reserved for this purpose, since other experiments in the same incubator might be affected by the release of ethylquinones. After several days, the suspended dead beetles are removed and a fresh cover of bolting silk placed over the jar. The medium is now a bright pink color, has come to equilibrium with the incubator temperature and humidity, and is ready for use.

An improvement over Figure 1 would be to place a small paper cone under the beetles to catch the few fecal pellets and bits of frass which work their

way through the bolting silk. The cone could be erected on a small platform of cardboard, leaving room for ventilation between the platform and the sides of the jar.

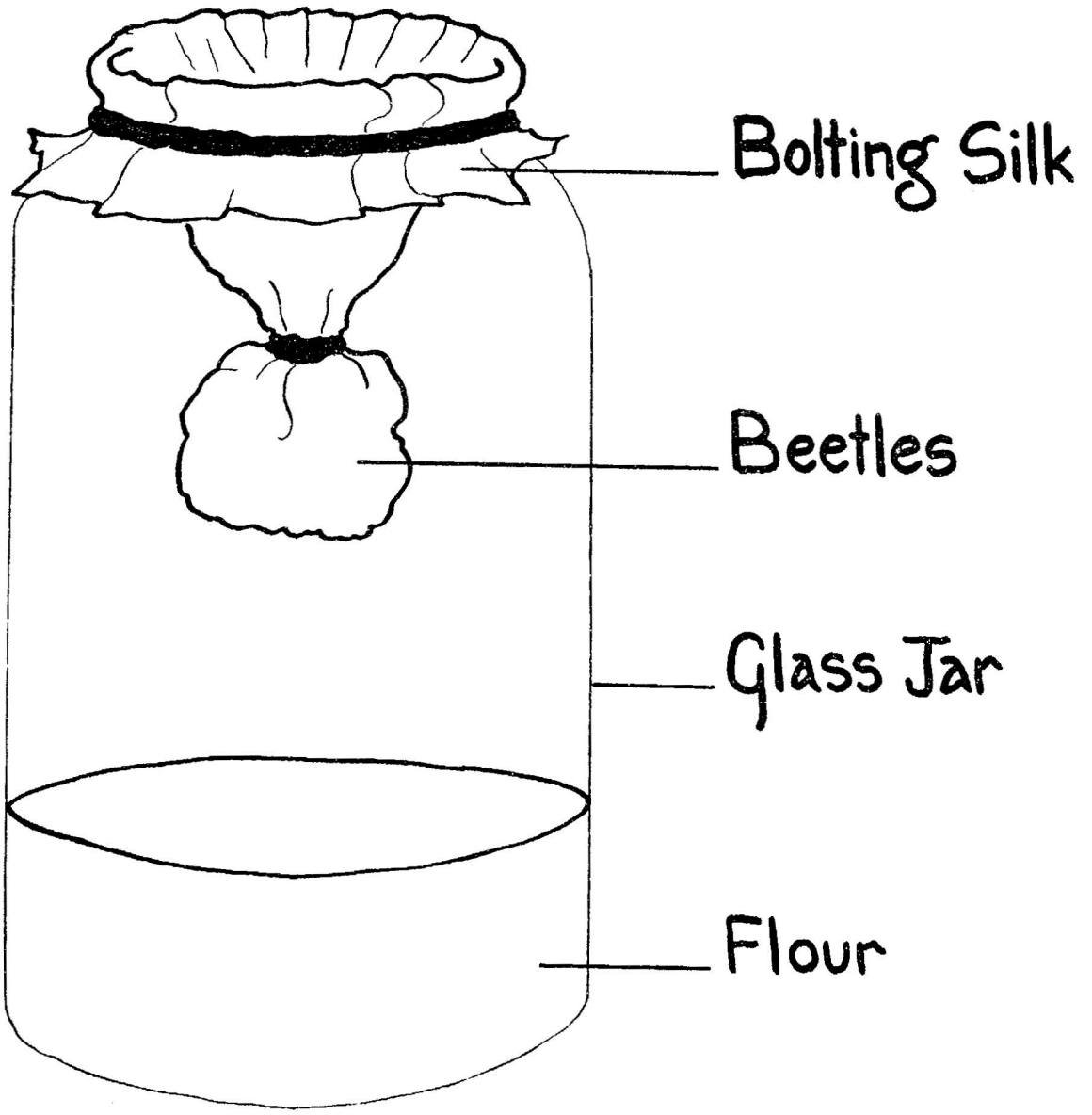


Figure 1

In my own experience, the pink color does not develop fully until after prolonged exposure to air, suggesting that oxidation products of the ethylquinones are responsible for the color and incidentally that the flour itself may be involved in chemical reactions. It may be, of course, that only the unoxidized ethylquinones have important physiological effects. If this or its converse is true, then the properties of the habitat would be expected to change gradually with time, and to change abruptly when the medium is sifted.

To be of any use, the technique I have described must be able to yield replicates, i.e., jars of medium which differ very little from each other in respect of chemical properties. Obviously, the best way to achieve standardization among several jars of 'pink' flour produced at the same time

or in close sequence is to combine the medium from all the jars, mix it together thoroughly, and reapportion by weight. This should be done in a way which minimizes, or at least standardizes, the increased contact of the medium with air. Between experiments conducted at different times, one must rely on ordinary methods of standardization--weighing out equal amounts of medium and equal quantities of beetles, standardizing the length of exposure to freezing temperture, and to incubator conditions, and so on. The other two points which the initiate might overlook require mention here. The first point is the need for standardizing the handling of the beetles. If they are simply separated from the medium and weighed out as a seething mass, they usually survive all right, but it is obvious from the smell produced that a great deal of ethylquinone has been lost. To compensate for variability in the condition of the beetles' glands arising from small variations in handling, therefore, it would seem a good idea to allow the animals a short recovery period in fresh medium after they have been weighed before freezing them in the apparatus. Secondly, it should be remembered that the odoriferous glands are not yet fully developed in very young imagoes.

I am indebted to Professor Thomas Park for suggesting improvements in the manuscript and to K. T. Marsland, Bureau of Animal Population, for drafting Figure 1.

Department of Zoology
University of Chicago
(now at Bureau of Animal Population, Oxford)

McDonald, D. J. and N. J. Peer. *A genetic analysis of "blistering" in *T. confusum*. (A summary of a paper delivered before the Society for the Study of Evolution, N.Y.C. December, 1960.)

A strain of *T. confusum* which regularly produces many pupae with blisters on one or both elytrae and adults with deformed elytral surfaces, ranging from just slightly roughened to severely blistered, has been maintained in this laboratory for several years. Two approaches to the study of the inheritance of this abnormality have been undertaken. Observations of the response to mass selection in both directions clearly indicate that the incidence of deformed individuals can be markedly decreased by selection. Attempts to increase the incidence produced far less pronounced results, probably due to the lowered viability and fertility which seems to accompany this abnormality. The results obtained from crosses of the blistered and wild type strains, along with the mass selection data, suggest that the inheritance of blistered (*bl*) involves a single mutant gene and modifiers which control the severity of the mutant gene's expression as well as its dominance relationship with the normal allele.

Dickinson College
Carlisle, Pennsylvania

McDonald, D. J. and N. J. Peer. *The effects of X-irradiation on fertility of male *T. confusum*.

Ten adult males of *T. confusum*, about three days old, received a dose of 4320 r of 180 Kv X-rays. Each was mated over 20 days with a series of ten females, remaining two days with each one in turn. Sixty eggs were collected from each female and the percent reaching the adult stage recorded. The combined data for each two-day period are as follows:

22%, 29%, 34%, 18%, 5%, 7%, 19%, 38%, 45%, 52%. Unirradiated controls have an average fertility of 82% over the same period. The data may indicate a difference in the X-ray sensitivity of sperm in various stages of maturation.

Dickinson College
Carlisle, Pennsylvania

Reynolds, Elisabeth M. and N. K. Sylvester. *Pearl mutant in *Trogoderma granarium* Everts (Dermestidae).

Pearl eyed individuals were noticed in a laboratory stock of *T. granarium* and test crosses were made with beetles from another stock in which no abnormal eye color had been found. $F_1$ and $F_2$ generations were reared and normal and pearl back crosses with the $F_1$ generation made. Both normal and pearl eyed progeny of the pearl back cross were crossed with pearl beetles. The progeny from all these crosses were consistent with pearl eye being determined by a single recessive autosomal gene.

When living pearl beetles are examined under a binocular microscope their eyes appear entirely devoid of pigment. The peripheral facets do not look dark as do those of pearl *T. confusum*. Owing to the protuberant nature of the eye in *T. granarium* the transparency of the ommatidia in pearl beetles is a striking feature of their appearance. Attempts to locate the pigment in normal eyes were confined to a simple dissection by which the protuberant segment of the eye was cut away. Heavy pigmentation was found in this segment.

In the mutant the lateral ocelli of the larva and the frontal ocellus of the adult exhibit a complete lack of pigment.

Pest Infestation Laboratory
London Road
Slough, Bucks., England

Schlager, G. and R. R. Sokal. *The relationships between length of larval period, density and weight in *Tribolium castaneum*.

During population growth studies it was found that pupal weight changes as the population size increases and a series of experiments were performed to determine if these changes were due to the effect of density. -- One such experiment is reported here.

The beetles used were of the Purdue University Foundation stock maintained at the University of Kansas for three years. Four densities were set up: one eggs in 1/4 gram flour, four in one gram, four in 1/4 gram, and sixteen in 1/4 gram. The eggs used were collected over a four-hour oviposition period. Cultures were maintained at 29° C and 70% Relative Humidity. The vials were checked daily for pupation; pupae were removed and weighed as they were found. The pupae were then isolated and the emerging adults were weighed within 48 hours after emergence.

Tables 1 and 2 show the results of this experiment.

Table 1
Means, Standard Errors, and (sample sizes)

Length of larval period in days

| Densities: | 1:1/4 gm | 4:1 gm | 4:1/4 gm | 16:1/4 gm |
|---|---|---|---|---|
| ♀ | 25.96±.179 (53) | 26.79±.382 (34) | 27.38±.326 (40) | 29.97±.400 (70) |
| ♂ | 26.12±.261 (32) | 27.00±.372 (40) | 27.33±.345 (36) | 29.81±.537 (54) |

Length of pupal period in days

| | 1:1/4 gm | 4:1 gm | 4:1/4 gm | 16:1/4 gm |
|---|---|---|---|---|
| ♀ | 6.53±.142 (53) | 6.15±.280 (34) | 6.48±.088 (40) | 6.51±.146 (70) |
| ♂ | 6.28±.221 (32) | 6.20±.246 (40) | 6.31±.206 (36) | 6.87±.102 (54) |

Weight of pupae in milligrams

| | 1:1/4 gm | 4:1 gm | 4:1/4 gm | 16:1/4 gm |
|---|---|---|---|---|
| ♀ | 2.13±.029 (53) | 2.26±.034 (34) | 2.28±.038 (40) | 2.18±.029 (70) |
| ♂ | 2.12±.042 (32) | 2.18±.038 (40) | 2.08±.043 (36) | 2.00±.030 (54) |

Weight of adults in milligrams

| | 1:1/4 gm | 4:1 gm | 4:1/4 gm | 16:1/4 gm |
|---|---|---|---|---|
| ♀ | 1.71±.040 (53) | 1.76±.082 (34) | 1.85±.032 (40) | 1.73±.042 (70) |
| ♂ | 1.68±.061 (32) | 1.66±.067 (40) | 1.63±.055 (36) | 1.61±.029 (54) |

Table 2
Correlation Coefficients Between 4 Variables Studied

| | ♀♀ | | | ♂♂ | | |
|---|---|---|---|---|---|---|
| | WP | LLP | WA | WP | LLP | WA |
| **1:1/4 gm** | | | | | | |
| LLP | .012 | -.157 | -.253 | -.274 | -.019 | 100 |
| WP | | .086 | .682* | | .024 | .422* |
| LPP | | | .653* | | | .793* |
| **4:1 gm** | | | | | | |
| LLP | .332+ | .009 | .200 | -.025 | -.028 | -.031 |
| WP | | .240 | .501* | | -.225 | .189 |
| LPP | | | .898* | | | .793* |
| **4:1/4 gm** | | | | | | |
| LLP | .355* | -.228 | .397* | .068 | -.074 | .041 |
| WP | | .234 | .858* | | -.198 | .214 |
| LPP | | | -.063 | | | .759* |
| **16:1/4 gm** | | | | | | |
| LLP | .142 | .216+ | .285* | -.158 | .011 | -.069 |
| WP | | .144 | .636* | | -.151 | .850* |
| LPP | | | .773* | | | -.473* |

Abbreviations:
LLP = Length of larval period
WP = Weight of pupa
LPP = Length of pupal period
WA = Weight of adult

* = $P \leq .05$
+ = Suggestive but not significant

It can be concluded from these data that two correlations are fairly constant: weight of pupa with weight of adult, and length of pupal period with weight of adult. This latter correlation is surprising since the average weight of pupae is fairly constant in the various densities. Three correlations are suggested in the higher density cultures: length of larval period with weight of pupae, length of larval period with length of pupal period, and length of larval period with adult weight. Additional experiments of this nature are now in progress.

Department of Entomology
University of Kansas
Lawrence, Kansas

Sinha, R. N. *Distribution studies of Tribolium spp. and Cryptolestes ferrugineus.

All available records of Tribolium confusum Duval, T. castaneum Herbst, T. destructor Uytten., and T. madens (Charp.) from 1868 to 1959 have been compiled as part of a general ecological problem on the introduction and distribution of insects and mites associated with stored products in Canada. Distributional maps for these four species have been made and investigations are now under way to determine ecological factors responsible for their present distribution in nature. Preliminary investigations indicate that T. madens, during the last few decades, has spread from its natural habitat on the Ponderosa Pine and Douglas Fir Section of the Montane Forest Region of Western Canada to flour mills and farm granaries in the central and eastern parts of Canada.

Unlike the rusty grain beetle Cryptolestes ferrugineus Steph., the distribution of T. castaneum appears to be limited by the low temperatures that prevail during the coldest month of the year. This limitation may be correlated with its inability to overwinter in some areas.

Any field record on Tribolium species north of the 50th Parallel would be useful in our investigation. We are especially interested in any data of this nature from Alaska and Siberia.

Canada Department of Agriculture
Research Branch
Winnipeg, Manitoba, Canada

Sokoloff, A. *A mite predator of Latheticus oryzae Waterh.

Investigators using flour beetles as experimental animals should be on the alert against possible mite infestations. One mite especially harmful to beetles is Pyemotes (=Pediculoides) ventricosus, a pyemotid mite. The infestation was noticed when sexed pupae of Latheticus failed to emerge as imagoes. Examination of the pupae under the dissecting microscope revealed balloon-like structures on various parts of the body of the pupae which turned out to be the much swollen abdomens of the attached mite.

The mite has an interesting life history. According to E. W. Baker (1952. An Introduction to Acarology. The Macmillan Co., New York), the fertilized female immediately seeks a suitable host, pierces it with its stylet-like chelicerae, and as it feeds the abdomen becomes "enormously distended." The eggs develop and hatch within the bag-like abdomen. The

developing mites complete all their stages within the parent and emerge only when mature. The first few to emerge are males. They feed little, and they pierce the parent, remaining close to it to fertilize the females as they emerge. A single female may produce as many as 200-300 offspring.

The infection in my cultures probably was started by a single gravid female. Subsequent examination of 19 Latheticus cultures revealed pyemotid mites in all but two vials. The majority of the mites were females, judging by the number of specimens with egg sacs. All of the Latheticus adults were dead, and on one freshly dead beetle were attached three mites. Of the 38 pupae found in all vials, only one was alive. Of the dead pupae, one was infested with eight mites, four with two, and four with one mite. Thus, almost 25% of the dead pupae had at least one mite. The larvae in all of these vials were dead. Multiple infestations with as many as three mites per dead larva were found. These are minimum values, since the mites may have been dislodged while sifting the beetles from the flour. It is also possible that mites do not stay attached to their hosts after they dry up. The average number of mites per vial was 14 with a range from 2 to 27.

The infestation did not go beyond these cultures. Upon discovery of the mites the whole series of vials was placed in an oven. As a preventive measure, a powdered acaricide was added to the flour (one per cent by weight) in the remaining, apparently uninfested, cultures.

Biological Laboratory
Cold Spring Harbor, New York

Sokoloff, A. *Irradiation experiments with Tribolium.

Park, De Bruyn and Bond (1958. Physiological Zoology 31:151-170) have made a thorough study of the effect of X-irradiation on the fecundity and fertility of T. castaneum and T. confusum at dosages ranging from 2,000 to 5,000 r. Their study, because of its scope, was limited to counts of eggs (and subsequently to counts of larvae emerging from the eggs) produced by irradiated and nonirradiated material in every possible mating combination throughout the lifetime of the beetles.

The present preliminary investigation attempted to determine: 1) at which point in the developmental cycle was mortality in progeny of X-rayed adults most marked; 2) whether the recovery phenomenon observed by Park et al. could be observed in these two species of Tribolium if irradiation was applied to the beetles at a faster rate; 3) whether the phenomenon of lowered fertility in X-rayed material is a heritable one; 4) whether sex-linked lethals had been produced by X-rays; and 5) whether any visible mutations had been induced.

Male and female adults of T. castaneum and males of T. confusum (descended from the Chicago stocks maintained by Dr. Park at the Univ. of Chicago) were given total X-ray dosages of 1500, 3000, and 6000 r in 2.5, 5, and 10 minutes, respectively. The age of the beetles was three days.

1. Time of action of X-rays.

For the first study 20 females of T. castaneum were mated when they were six days old (three days after irradiation) to unirradiated males of the same age. The single pairs were introduced into creamers containing about 5 grams of flour and allowed to remain for 24 hours. At the end of this period the parents were removed to creamers containing fresh medium where they were left

for six days. The eggs in the old creamers were sifted out of the flour, counted, and returned to their respective creamers. Three weeks later the flour was sifted off, the larvae and pupae were counted, and the flour and the juvenile stages returned to their containers. Three weeks later the numbers of adults in each creamer were determined and, except for a few pairs to obtain the $F_2$, the adults were discarded. Creamers where the pairs of adults had been left for six days were saved, and the number of adult progeny present at the end of six weeks recorded and the adults discarded. This procedure was repeated for a total of six times. All creamers were maintained in an incubator set at 32° C and the relative humidity was maintained at about 70%. The results for three doses of X-rays were as follows:

Eggs, larvae, and adults produced by T. castaneum irradiated females x unirradiated males for a 24-hour and 6-day egg-laying period. (Six-week totals)

| | 24-hour period | | | | | 6-day period | | |
|---|---|---|---|---|---|---|---|---|
| | Egg | Juvenile | Adult Count | | | Adult Count | | |
| Dosage | Count | Count | M | F | Total | M | F | Total |
| 1500 r | 1496 | 702 | 363 | 319 | 682 | 2230 | 2184 | 4414 |
| 3000 r | 1121 | 175 | 85 | 88 | 173 | 486 | 465 | 951 |
| 6000 r | 138 | 0 | | | 0 | | | 0 |

(Through an error unirradiated controls were not set up in this experiment. A parallel study, however, indicates that the fertility of our unirradiated stocks was of the order of 70%. Total adult production of T. castaneum controls for six weeks was equal to 4568 beetles of both sexes.)

It would appear from these data that the main effect of X-rays is observed at the egg stage, i.e., if any eggs hatch into larvae nearly all of the larvae reach the adult stage. The last dosage, which was higher than the highest used by Park et al., should serve as supplementary information on the effect of X-rays on fertility of this species. It is evident that females are highly susceptible to this high dosage. Even though females receiving 6000 r may survive to lay eggs, none of these is viable.

2. Recovery phenomenon.

Males of T. castaneum, 10 irradiated with 3000 r, 10 with 6000 r, and 10 unirradiated were mated to nonirradiated females. They were introduced into creamers containing about 5 grams of medium as single pairs, and transferred to fresh medium twice a week. The same procedure was followed for T. confusum. The beetles were just eight days old at the start of the experiment, and they were allowed to remain in the creamers for not less than three days nor more than four days. The data are summarized in the following table, and consist in the adult progeny recorded six weeks after removal of the parents, and produced by ten females in a period of eight and one-half weeks.

Adults produced by irradiated males x unirradiated females and controls.

| | Controls | | | 3000 r | | | 6000 r | | |
|---|---|---|---|---|---|---|---|---|---|
| Species | male | female | total | male | female | total | male | female | total |
| T. castaneum | 3195 | 3169 | 6364 | 384 | 349 | 733 | 14 | 18 | 32 |
| T. confusum | 2502 | 2502 | 5004 | 212 | 191 | 403 | 6 | 4 | 10 |

These data show that normal T. castaneum females, mated to 3000 r irradiated males produce fewer offspring than the reciprocal cross. The difference is attributable in part to death or sterility of irradiated males. It is noteworthy that some males are not affected as drastically as females by a dosage of 6000 r, since they can produce at least a few offspring (but less than one per cent of the controls). T. confusum is more susceptible than T. castaneum to a dosage of 6000 r in two ways: T. confusum produces fewer offspring, and none are produced after the second week. T. castaneum produces more offspring distributed over four weeks. There is a possibility that some castaneum may recover to 6000 r exposure after eight weeks (two beetles, the progeny of a single pair, were found in the last creamers, i.e., those creamers in which the parents had been introduced eight and a half weeks after the start of the experiment; but by then the parents had been discarded so that no further observations were possible).

Park et al. (p.167) noted that in T. confusum irradiated males x unirradiated females at all dosages except 5000 r a recovery phenomenon could be observed so that eventually females mated to irradiated males produced as many offspring as the controls. This phenomenon failed to express itself in the similar crosses for T. castaneum, but could be found in the nonirradiated male x irradiated female series. In the present experiment 3000 r irradiated males of both species experienced the same recovery phenomenon and it occurred at the same time for both species: From day 11-46 (the age of the parents) the number of offspring of both species of beetles fell gradually, approaching zero. Later, the male parents apparently began to produce more viable sperm. The net result was that the total number of adults produced in these five and a half weeks was 183 for T. confusum and 346 for T. castaneum. In the next three weeks T. confusum produced 220 and T. castaneum 387 adult progeny.

These data, therefore, support and supplement those reported by Park et al.

It may be of interest at this point to compare the fertility or productivity of the controls in Park et al.'s and the present study. Park et al. give the following figures for the total lifetime production:

| | eggs | larvae | fertility | N |
|---|---|---|---|---|
| T. castaneum | 6094 | 3684 | 60.4 | 6 |
| T. confusum | 8544 | 5164 | 60.4 | 6 |

If we assume that all the larvae survive to adults, it follows that in the control series in their study T. confusum would produce 860 adults per female and T. castaneum 614 adults per female. (These figures are therefore optimal, and represent the total average progeny which a female of T. confusum would produce in 180 days and which a female of T. castaneum would produce in 135 days. In the controls of the present study each T. confusum female produced 500 adults in 60 days, and each T. castaneum female produced 636 adults in the same period, on the average. (These figures are based on the average adult productivity of 10 females for each of the species.)

The reason for the much higher productivity in these experiments probably lies in the technique used. Park et al.'s standardized technique is to introduce single pairs of adults into vials containing eight grams of flour. The parents are gently removed from the flour after it is dumped into a sieve; the eggs are then sifted out and the flour and the adults are returned to the vial. The flour is renewed at every 30-day intervals. The eggs are counted and placed in an empty Syracuse dish and the dish kept in the incubator. The dishes are then periodically inspected for first instar larvae until it is certain that no more eggs will hatch.

Our technique differs from Park et al.'s in that the parents are sifted out of the flour through a fine mesh sieve (which also separates the eggs from the flour). The parents are then transferred to fresh medium. After the eggs are counted, both flour and eggs are returned to their containers.

Sokoloff et al. (unpublished) have compared productivity of various strains of T. castaneum and have come to the conclusion that if fecundity or productivity studies are to be undertaken, it is necessary to provide the adults with fresh medium at all times. In measured amounts of medium the same number of adults produced almost as many adult progeny in 24 hours if the medium was renewed daily as they would produce in 20 days if the medium was not renewed. Perhaps the difference in fertility in Park et al.'s and our stocks (60.4% in their study, 70% in the present one) is only a reflection of the way the eggs are handled after they are counted: Leaving the eggs in an empty dish may result in greater in ovo mortality than if the eggs are covered with flour.

3. Heritability of X-ray effects.

Park et al.'s data and the data presented above leave no doubt that exposure of adults to X-rays results in a drop in fertility, the degree of fertility drop depending on the dosage of X-rays to which the beetles are exposed. These are obviously immediate physiological effects. The question explored in this section is whether this effect persists in the next generation.

A small number of matings was made between the progeny of 3000 r irradiated males x unirradiated females. The $F_1$ parents were left in creamers for 20 days and then discarded. $F_2$ adults were counted three weeks later. The results are summarized in the following table:

$F_2$ progeny of controls and sib-mating of 3000 r male x unirradiated female $F_1$'s.

| | | M | F | Total | N |
|---|---|---|---|---|---|
| T. castaneum | Controls | 302 | 368 | 670 | 7 |
| | $F_1$ x $F_1$ | 482 | 472 | 954 | 15 |
| T. confusum | Controls | 477 | 423 | 900 | 10 |
| | $F_1$ x $F_1$ | 180 | 195 | 375 | 12 |

This table shows that whatever the effect of X-rays may be, it is passed on to the next generation. In T. castaneum the controls produced almost 96 adults per female, whereas the $F_1$'s produced only 63 adults per female. The effect seems to be more severe in T. confusum, since the $F_1$'s produced only 31 adults per female, versus the 90 offspring per female recorded for the controls. The sex ratio is close to 1:1. If the X chromosome of the male $P_1$ exposed to X-rays had developed a lethal, the sex ratio would certainly be modified.

4. Genetic studies in quest of sex-linked lethals induced by X-rays.

T. castaneum males exposed to 3000 r and 6000 r were mated to ma +/+ pd, ma +/+ sp, and r +/+ pd females. The $F_1$ progeny consisted of males whose X chromosomes were marked with various, easily identifiable genes and whose

mothers had not been subjected to X-rays, and females possibly heterozygous for sex-linked lethals, and heterozygous for various sex-linked genes. The $F_1$ progeny were mated inter se. The $F_2$ were examined for wide departures from the expected frequencies in regard to sex and phenotype. None of the tests resulted in a positive finding of sex-linked lethals.

5. A search for visible mutations.

Both the wild type controls and the X-rayed material have been carefully examined for any visible mutations. Time permitted to examine the material for only two generations after irradiation. The following visible mutations have been found: blistered elytra, deformed forelegs, split elytra, and pink eyes. The first three have been found repeatedly in the Chicago wild type (unirradiated) strain, so that undoubtedly the genes responsible for these phenotypic deviants were present in the material before irradiation (for further details on these mutations see section on New Mutants in TIB-3). On the other hand, the pink mutation, although detected by Lasley in some highly inbred substrains of the Chicago wild type, had not been detected previously in the Chicago strain used in the irradiation studies nor in the pygmy-paddle (py pd) stock. The mating procedure was to obtain py pd males (unirradiated) from the stock to mate with irradiated females. The normal-appearing $F_1$ progeny were mated inter se to obtain the $F_2$. The $F_1$ males were, therefore, phenotypically normal but half of their chromosomes had been irradiated. The $F_1$ females also were bearers of an irradiated chromosomes and in addition were heterozygous for the sex-linked py pd genes. Of the 15 $F_1$ matings set up 12 were successful, and in one creamer the following phenotypes were found:

| Phenotype | male | female |
|---|---|---|
| wild type | 15 | 24 |
| pygmy paddle | 11 | |
| pink | 3 | 17 |
| pink pygmy paddle | 7 | |

Clearly the pink condition is due to an autosomal recessive gene. But the question remains whether the mutant was induced by X-rays or appeared in this particular mating because of a fortuitous mating of two pink-eyed heterozygotes. It is tempting to ascribe the occurrence of this mutation to the effect of X-rays on the pre-meiotic stages of the X-rayed female for the following reasons:

(1) Since pink individuals were found in one out of the 12 $F_1$ x $F_1$ crosses frequency of the pink heterozygotes in the original stocks would have to be very high--of the order of about 25%. Thus, other matings of $F_1$ x $F_1$ in the other studies would have to show the pink-eyed condition.

(2) The mutation had to be induced in the pre-meiotic stages because of the large numbers of pink beetles detected in the $F_2$ results. Had the mutation taken place in the post-meiotic stages it would be necessary to carry on these studies to the $F_3$, for they could be present as heterozygotes down to the $F_2$ generation.

It is, therefore, strongly possible that the pink mutation (which incidentally has not been tested for allelism with the pink mutation found by Lasley) was induced by X-rays. However, more work is necessary to establish this with certainty.

6. Concluding remarks.

In Park et al.'s and in the above study data on fecundity and fertility following exposure to X-rays have been presented. Sokoloff's study also includes a section pointing out that, if desired, one can study the effects of X-rays on the basis of adult productivity since nearly all larvae and pupae are able to metamorphose into imagoes. Thus, as in other organisms, the lethal effect of X-rays comes into play in the embryonic stage. In Drosophila irradiation studies the data for the various exposures to X-rays are expressed in percent dominant lethals found. This method gives an almost graphic representation of the effects of irradiation. For comparison purposes Park et al.'s data which are far more extensive and Sokoloff's limited data have been recomputed to show the proportion of dominant lethals. They are entered separately in the following table. (The dominant lethals in Park et al.'s data were computed on the basis of 60.4% fertility of the controls. Sokoloff's data for T. castaneum male unirradiated, female irradiated ($M_o$ $F_r$) were computed on the basis of 70% fertility for his stocks. On the other hand some data for T. castaneum and T. confusum unirradiated controls and irradiated males x unirradiated females were available in which adult counts only were made. The dominant lethals entered under these columns--2 and 5 in the table--were computed directly from the formula $\left(1 - \frac{\#\text{ irradiated adults}}{\#\text{ unirradiated adults}}\right) \times 100$. The data are given in the following table without any comment.

Percent dominant lethals found in T. castaneum and T. confusum. (a. = Park et al.'s data; b. = Sokoloff's data; M = male; F = female; r = irradiated; o = nonirradiated.)

| | | T. castaneum | | | T. confusum | | |
|---|---|---|---|---|---|---|---|
| | Dose (r) | $M_r$ $F_o$ | $M_o$ $F_r$ | $M_r$ $F_r$ | $M_r$ $F_o$ | $M_o$ $F_r$ | $M_r$ $F_r$ |
| a. | 2000 | 47.6 | 18.6 | 57.2 | 16.1 | 40.9 | 60.5 |
| | 3000 | 56.0 | 40.0 | 66.4 | 24.5 | 77.7 | 77.4 |
| | 4000 | 56.5 | 74.4 | 91.8 | 41.1 | 75.1 | 93.7 |
| | 5000 | 83.2 | 73.6 | 89.3 | 65.4 | 86.1 | 71.1 |
| b. | 1500 | | 33.0 | | | | |
| | 3000 | 88.5 | 77.8 | | 92.0 | | |
| | 6000 | 99.5 | 100 | | 99.8 | | |

Biological Laboratory
Cold Spring Harbor, New York

## NOTES AND NEWS

### TECHNICAL NOTES*

Bartlett, A. C. *Photographic techniques for Tribolium. Satisfactory color photographs of live adult beetles as well as pupae and larvae have been obtained by the use of an extremely simple copying device. The photographic equipment consists of a Leica 35mm camera model 1g (focal plane shutter) with Summar 24mm F/4.5 coated lens. The lens is mounted on common extension tubes. The camera back is mounted on a sliding bar which also contains a ground glass viewing plate arranged at the same focal distance as the film strip in a camera (see Figure 1). This sliding bar allows one to bring the object into exact

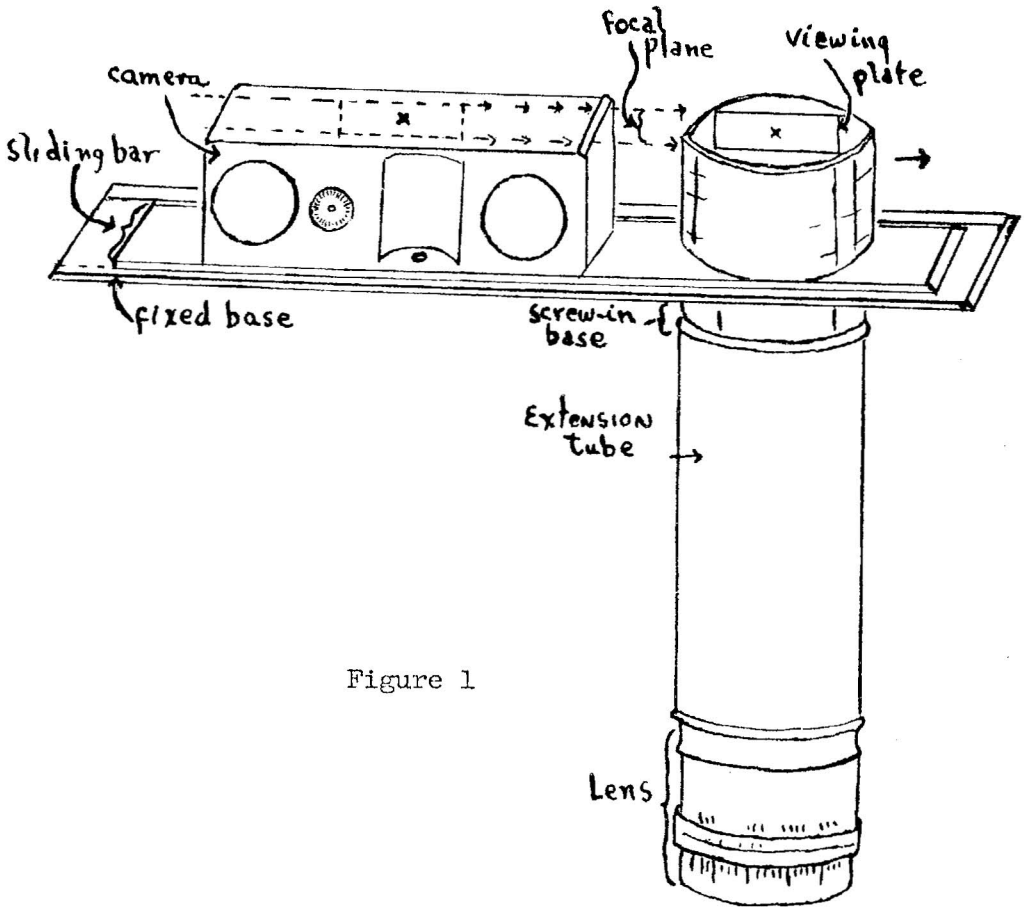


Figure 1

focus at the level of the ground glass plate. The camera then slides into the exact position occupied by the plate. Exposure of the film can then be accomplished merely by adjusting the relative aperture (i.e., the f-number) to the desired stop and opening the shutter for a predetermined length of time. Usually one roll of film must be sacrificed in order to determine the correct f-number and exposure time. A similar arrangement was sold under the name Kodaslide but now evidently this model is discontinued.

* An asterisk before a title indicates reference authorized.

The lighting for slides obtained for our work was accomplished by simply opening the shutter on the camera in a slightly darkened room and then flashing an electronic flash unit a specified number of times. Best results were obtained at f-16 with three flashes at a distance of one foot from the object--the flashgun was moved to the corners of a triangle around the object in order to obtain equal intensity of lighting on all sides of the object. The magnification on these photographs was about 2X.

Perhaps the crucial factor in any type of close-up work is the type of film being used. Happily, Kodak has recently released a High Speed Ektachrome film (daylight type) which has an ASE index of 160. The color reproduction for beetles is excellent. The film can be processed by a dealer, or preferably at home with the Kodak Ektachrome Processing Kit, Process E-2, Improved Type. The do-it-yourself feature is valuable since you can immediately determine the quality of the slides while your material is still photographable.

The photographic equipment described above can be used with equal utility for copying any type of line drawing or table as well as obtaining microfilm of the literature. Further information on such copying can be obtained from the Kodak Data Book on Copying available through most photographic supply houses.

Population Genetics Institute
Purdue University
West Lafayette, Indiana

Eddleman, H. L. Faced with the problem of shipping large numbers of Tribolium mutants to requesting schools and colleges (126 requests were received), we made shipping containers by rolling gummed manila tape into tubes 3" long having diameters of 1/4". Ends were closed by stapling. Thus, eight cultures may be shipped by air mail letter for the minimum rate. We shipped a hundred cultures during the coldest weather to all parts of the U. S. and Canada. We understand that all arrived in good condition and were fertile. Many teachers stated that they hoped to save work by using Tribolium in place of Drosophila in lab courses.

Salem-Washington Township High School
Salem, Indiana

Sokoloff, A. Advantages of using Tribolium in genetics research and in teaching. Flour beetles of the genus Tribolium and particularly the species T. castaneum and T. confusum offer certain obvious advantages in research and in teaching, all of which are related to their life habits.

One advantage of flour beetles over other organisms used in similar problems, and which (to the writer's knowledge) has not been stressed, relates to the ability of these organisms to survive for many months. This is advantageous in teaching, since stocks are not likely to go into extinction: If, before the summer vacation, the teacher will take a few hours to sex some (say 50) pupae from every stock, and place males and females separately in properly labeled containers containing medium, he can go away

for the whole summer without worry, return from his vacation, place the beetles of the two sexes together, and thus re-establish his stocks.

The same procedure can be used for maintaining lethal or semi-lethal stocks: if one takes the precaution of sexing pupae heterozygous for the mutant character and every so often takes the pains to breed these organisms to maintain heterozygous material, few of the lethal stocks need be lost. Even if the homozygous lethal or semi-lethal stock is lost, it is still possible to re-establish it from heterozygous material.

Biological Laboratory
Cold Spring Harbor, New York

## NOTES AND NEWS

### TEACHING NOTES

Shrode, R. Flour beetles for high school science projects.

Flour beetles are excellent material for high school science projects because of many desirable features of which we are all aware. I have started two students on beetle projects. One is making appropriate matings and collecting data to establish the mode of inheritance of two mutant characters, and the other is conducting population studies of various kinds. In addition to the worth-while experience gained by students in such projects, there is the possibility of much valuable information being added to our growing store of knowledge concerning flour beetles and basic biology in general. By this means many interesting projects may be undertaken which might never be fitted into a formal research program.

De Kalb Agricultural Association, Inc.
Sycamore, Illinois

## NOTES AND NEWS

### NEWS AND ANNOUNCEMENTS

Moore, J. Note on current work on Tenebrio at UCLA.

Our laboratory has recently published on the results of some microbial isolations from the mid-gut of *Tenebrio molitor* larvae: Wistreich, G., J. Moore and J. Chao. 1960. Microorganisms from the mid-gut of the larva of *Tenebrio molitor* Linnaeus. J. Ins. Path. 2(4): 320-326.

At present we are making a similar investigation with *T. obscurus*.

Work is also continuing on attempts to culture the gregarine parasites of *T. molitor* under *in vitro* conditions.

Department of Zoology
University of California
Los Angeles, California

Announcement of a meeting of Tribolium workers.

Dr. Earl R. Rich is organizing a meeting for investigators using Tribolium in their research. The meeting is to be held at Purdue in connection with the AIBS meetings this summer. According to Dr. Rich, the main purpose of the meeting is to exchange information on "current work, dead ends, and odd bits of information."

If you have any ideas on the subject, please contact Dr. Rich at the Department of Zoology, University of Miami, Coral Gables, Florida, as soon as possible. The date of the meeting will be announced in the near future.